ID: 2697-00-75
Main Street Traffic Analysis
Division Street to Concord Place

Village of Thiensville
Ozaukee County, Wisconsin

August 20, 2014

TADI
TRAFFIC ANALYSIS & DESIGN, INC.

TRAFFIC ANALYSIS

ID: 2697-00-75
MAIN STREET
DIVISION STREET TO CONCORD PLACE

VILLAGE OF THIENSVILLE, WISCONSIN

August 20, 2014

PREPARED FOR:
Ruekert & Mielke, Inc.
W233 N2080 N. Ridgeview Parkway
Waukesha, WI 53188
Phone: (262) 953-2650
Contact Person: Kevin Wagner

PREPARED BY:
Traffic Analysis & Design, Inc.
N36 W7505 Buchanan Ct.
Cedarburg, WI 53012
Phone: (262)-377-1845
Fax: (262)-377-4381
Contact Persons: Tammi Czewski, P.E., PTOE
John A. Bieberitz, P.E., PTOE

TABLE OF CONTENTS

LIST OF EXHIBITS ii

LIST OF APPENDICES iii

CHAPTER I – EXECUTIVE SUMMARY 1
- PART A – INTRODUCTION 1
- PART B – SCOPE OF WORK 1
- PART C – RECOMMENDATIONS 2
- PART D – CONCLUSIONS 2

CHAPTER II – STUDY AREA & DATA COLLECTON 3
- PART A – EXISTING ROADWAY CHARACTERISTICS 3
- PART B – TRAFFIC DATA COLLECTION 4
- PART C – TRAFFIC FORECASTS 4

CHAPTER III – INTERSECTION & ROADWAY SAFETY 5

CHAPTER IV – TRAFFIC OPERATIONS ANALYSIS 6
- PART A – LEVEL OF SERVICE DEFINITIONS 6
- PART B – PEAK HOUR INTERSECTION OPERATING CONDITIONS 6

CHAPTER V – RECOMMENDATIONS & CONCLUSION 8
- PART A – RECOMMENDED IMPROVEMENTS 8
- PART B – CONCLUSION 8

LIST OF EXHIBITS

Exhibit 1.....Project Location Map

Exhibit 2.....Existing Transportation Detail

Exhibit 3.....Existing 2014 Traffic Volumes

Exhibit 4.....Construction Year 2015 Traffic Volumes

Exhibit 5.....Design Year 2035 Traffic Volumes

Exhibit 6.....Construction Year 2015 Peak Hour Capacity/LOS Analysis

Exhibit 7.....Design Year 2035 Peak Hour Capacity/LOS Analysis

Exhibit 8.....Design Year 2035 Peak Hour Capacity/LOS Analysis with Improvements

Exhibit 9.....Recommended Improvements

LIST OF APPENDICES

Appendix A.....Traffic Data Collection

- A1. Peak Hour Turning Movement Counts
- A2. WisDOT Traffic Forecasts
- A3. Existing Signal Timings

Appendix B.....Main Street Crash Data and Crash Diagrams

Appendix C.....Peak Hour Capacity Analysis Worksheets

- C1. Construction Year 2015 – Existing Transportation System
- C2. Design Year 2035 – Existing Transportation System
- C3. Design Year 2035 – Improved Transportation System

CHAPTER I – EXECUTIVE SUMMARY

PART A – INTRODUCTION

Traffic Analysis & Design, Inc. (TADI) was retained to conduct a Traffic Operational Analysis for the Main Street corridor from Division Street to the north Village limit at Concord Place in the Village of Thiensville, Ozaukee County, Wisconsin. Main Street will be resurfaced along with curb and gutter repair/replacement, sidewalk improvements to meet ADA requirements, other pedestrian improvements, and streetscape improvements. The resurfacing project utilizes Federal funding; therefore, this Traffic Operational Analysis report follows the procedures and guidelines of the Wisconsin Department of Transportation's (WisDOT's) *Facilities Development Manual* (FDM).

This study evaluates construction year 2015 and design year 2035 traffic operations and improvements (if needed) at six intersections along Main Street. Based on discussions with WisDOT review agencies, this study does not include crash data or safety evaluation of the Main Street corridor.

PART B – SCOPE OF WORK

B1. Traffic Volume Data

Turning movement traffic volumes were collected at the study intersections along Main Street in early April 2014. WisDOT prepared traffic forecasts for these intersections for the Construction Year 2015 and the Design Year 2035. The Design Year 2035 forecasts include additional traffic expected from full buildout of the Mequon Town Center development, to be located in the northwest corner of Cedarburg Road and Mequon Road.

B2. Safety Review

Crash data from 2010, 2011, and 2012 was compiled by Ruekert-Mielke for the Main Street corridor from Division Street to Concord Place. Based on the information collected, there were 35 total traffic crashes in the three-year analysis period. Of these, 43 percent were rear-end crashes, 29 percent involved crossing or opposing vehicles, and 22 percent involved fixed objects. None of the crashes involved pedestrians or bicycles. Although 10 of the total crashes occurred near the intersection with Freistadt Road, there were no apparent crash patterns at this intersection.

B3. Intersection Operations Analysis

Intersection operations were evaluated for the weekday AM and PM peak hours using Synchro 8 software, which utilizes the procedures documented in the 2010 Highway Capacity Manual. For each movement at the study intersections, delays, queues, and levels of service (LOS) ranging from A to F were documented. For this study, LOS D or better was considered acceptable for traffic operating conditions along the corridor.

Based on the analysis of the existing geometrics and traffic control, all turning movements at the study intersections are expected to operate acceptably at LOS D or better with the Construction Year 2015 and Design Year 2035 traffic volumes. However, some traffic queues at the Main Street intersection with Green Bay Road/Buntrock Road may exceed the amount of available storage. This is expected to occur at the westbound left-turn lane with the Construction Year

2015 and Design Year 2035 traffic volumes, and at the northbound right-turn lane with the Design Year 2035 traffic volumes.

PART C – RECOMMENDATIONS

- Prior to Freistadt Road, southbound Main Street widens to allow two southbound through lanes which turn into one through lane and one left-turn lane at Riverview Drive. No advanced signing is provided to alert motorists to the lane drop. No crashes have been reported for southbound Main Street in this roadway section, but some observers have reported that this situation causes sudden lane shifts from motorist unfamiliar with the area, and many "near-miss collisions."

  Recommendation: To mitigate the lane drop, it is recommended to install a "Left Lane Must Turn Left – At Riverview Dr." sign at appropriate intervals in advance of the lane drop at Riverview Drive.

- Since all study intersections are expected to operate with acceptable delays with the Construction Year 2015 traffic volumes during the peak hours, no additional changes are recommended for this analysis year. As traffic volumes increase to the Design Year 2035 levels, additional green time for the eastbound/westbound traffic movements may be needed at the Main Street intersection with Green Bay Road/Buntrock Avenue to maintain acceptable LOS.

  Recommendation: Periodically review traffic operations at the Main Street intersection with Green Bay Road/Buntrock Avenue to determine when signal timing adjustments may need to be implemented.

PART D – CONCLUSIONS

The planned resurfacing improvements to the Main Street intersection and other improvements listed above are expected to result in acceptable traffic operating conditions with the Construction Year 2015 and Design Year 2035 traffic volumes.

CHAPTER II – STUDY AREA & DATA COLLECTON

PART A – EXISTING ROADWAY CHARACTERISTICS

A1. Study Intersections

The study intersections along Main Street include six intersections as shown on Exhibit 1. All six study intersections evaluated in this report are listed below:

- Main Street & Heidel Road (stop sign control)
- Main Street & Grand Avenue (stop sign control)
- Main Street & Freistadt Road (traffic signal control)
- Main Street & Riverview Drive (stop sign control)
- Main Street & Buntrock Avenue/Green Bay Road (traffic signal control)
- Main Street & Division Street (stop sign control)

The existing lane geometrics, turn bay lengths, and traffic control for each study intersection are shown on Exhibit 2. Exhibit 2 also shows study area roadway speed limits and the distance between each study intersection.

A2. Existing Land Uses

The Main Street study area is mostly comprised of commercial land uses along both sides of the roadway. On the north of Main Street end near Grand Avenue and Heidel Road, development transitions to more of a residential nature.

A3. Study Area Roadways

Main Street is primarily a two-lane north/south Principal Arterial through Thiensville, and is also named Cedarburg Road to the north of Concord Place and south of Division Street. Between Grand Avenue and Riverview Drive, Main Street has a transitional four and five-lane cross-section. Throughout this entire section, the outside northbound lane on Main Street is primarily striped as a continuous right-turn lane for the development driveways along the roadway. The inside lane on southbound Main Street is alternately used as a through lane and a left-turn lane. In some areas, such as in front of Harris Bank, the inside southbound lane is striped as a left-turn lane and there is also a two-way left-turn lane for left-turn traffic.

According to coverage counts posted by WisDOT, the 2013 annual average daily traffic (AADT) volumes on Main Street were 7,700 vehicles per day (vpd) north of Heidel Road and 14,200 vpd south of Division Street. The speed limit on Main Street is posted at 30 mph north of Heidel Road, and at 25 mph from Heidel Road through Division Street. There are pedestrian sidewalks along both sides of Main Street throughout the study area.

Freistadt Road is a two-lane east/west undivided Minor Arterial that provides access to Germantown and Richfield to the west, and eventually connects to Highland Road east of Thiensville. Freistadt Road has a posted speed limit of 25 mph and sidewalks on both sides of the roadway between Williamsburg Drive and Green Bay Road. The WisDOT 2013 AADT on Freistadt Road is 3,000 vpd west of Main Street. The WisDOT 2010 AADT on Freistadt Road is 2,600 vpd east of Main Street.

Green Bay Road is a two-lane north/south undivided Minor Arterial that first runs diagonally from Main Street and then runs nearly parallel to Main Street to provide secondary access from

Thiensville to Cedarburg. Sidewalks are located along most sections of Green Bay Road through the Village limits. The WisDOT 2013 AADT on Green Bay Road is 5,100 vpd.

Buntrock Avenue is a two-lane east/west Collector roadway that connects to Main Street across from Green Bay Road and eventually turns north/south to provide access to Mequon Road (STH 167) and to neighborhoods further south.

Heidel Road, Grand Avenue, Riverview Drive, and Division Street are two-lane east/west Local roadways with posted speed limits of 25-mph. Grand Avenue and Riverview Drive have sidewalks on both sides of the roadway for pedestrians. Each of these roadways provides access to the residential neighborhood areas of Thiensville.

PART B – TRAFFIC DATA COLLECTION

Turning movement traffic volumes were collected at the study intersections along Main Street in early April 2014. All traffic counts were collected from 6:00 a.m. to 8:30 a.m. and from 2:30 p.m. to 5:30 p.m. The peak hour turning movement counts collected for this study are included in Appendix A1. The peak hour factors (PHF) and heavy vehicle percentages for each intersection were summarized from the count sheets in a separate table at the beginning of Appendix A1.

Based on the compiled turning movement counts, the weekday peak hours for the entire corridor were identified to occur as follows:

- Weekday Morning (AM) Peak Hour: 7:00-8:00 a.m.
- Weekday Evening (PM) Peak Hour: 4:30-5:30 p.m.

The existing year 2014 turning movement traffic volumes at the study intersections are shown on Exhibit 3. The traffic volumes were not balanced between intersections due to the many development driveways located along the corridor.

Signal timing and phasing data for the Main Street intersections with Freistadt Road and Green Bay Road/Buntrock Avenue is included in Appendix A2.

PART C – TRAFFIC FORECASTS

WisDOT prepared traffic forecasts for the Main Street corridor based on the 2014 peak hour turning movement count data collected by TADI. Forecasts were developed for the Construction Year 2015 and the Design Year 2035. The Design Year 2035 forecasts include additional traffic expected from full buildout of the Mequon Town Center development, to be located in the northwest corner of Cedarburg Road and Mequon Road. The WisDOT traffic forecasts for the study intersections along Main Street are located in Appendix A3. The peak hour turning movement forecasts are shown on Exhibit 4 (Construction Year 2015 Traffic Volumes) and on Exhibit 5 (Design Year 2035 Traffic Volumes).

CHAPTER III – INTERSECTION & ROADWAY SAFETY

Ruekert-Mielke collected crash data along Main Street from Division Street to Concord Place for the years 2010, 2011, and 2012. Collision diagrams prepared by Ruekert-Mielke and the traffic crash data collected along Main Street are located in Appendix B.

During the three-year period from 2010 through 2012, a total of 35 traffic crashes occurred. About 43 percent of the total crashes were rear-end crashes, 29 percent included crossing or opposing vehicles, and 22 percent involved fixed objects. None of the crashes involved pedestrians or bicycles.

Ten of the total corridor crashes occurred near the intersection with Freistadt Road. There were no apparent crash patterns observed from these 10 crashes at the intersection.

Corridor crash rate statistics by year (2010, 2011, and 2012) are shown in Table 1. The Main Street crash rates (per 100 million vehicle miles) between Division Street and Concord Place were compared to the statewide crash rate calculated for urban streets. As shown in Table 1, Main Street had crash rates that were well below the statewide average crash rates for urban streets in 2010, 2011, and 2012.

Table 1. Project Crash Information for Summit Avenue (2010-2012)

Year	Crash Rate[1, 2]	Statewide Crash Rate[1,2,3]	Number & Severity of Crashes			
			Fatal	Injury	PDO	Total
2010	114	286	0	6	8	14
2011	98	317	0	2	10	12
2012	73	333	0	1	8	9

[1] Deer crashes were excluded from the study.
[2] Crash rate calculated as the number of crashes per 100 million vehicle miles.
[3] Statewide Crash Rate as published by WisDOT in 2012 for "Urban Streets".

CHAPTER IV – TRAFFIC OPERATIONS ANALYSIS

PART A – LEVEL OF SERVICE DEFINITIONS

The study intersections were analyzed based on the procedures set forth in the *2000 Highway Capacity Manual* (HCM) using the Synchro 7.0 software. Intersection operation is defined by "level of service". Level of Service (LOS) is a quantitative measure that refers to the overall quality of flow at an intersection ranging from very good, represented by LOS 'A', to very poor, represented by LOS 'F'. LOS D or better was considered acceptable traffic operations for turning movements evaluated in this study. Descriptions of the various levels of service are as follows:

- **LOS A** is the highest level of service that can be achieved. Under this condition, intersection approaches appear quite open, turning movements are easily made, and nearly all drivers find freedom of operation. At signalized intersections, average delays are less than 10 seconds. At unsignalized intersections, average delays are less than 10 seconds.
- **LOS B** represents stable operation. At signalized intersections, average vehicle delays are 10 to 20 seconds. At unsignalized intersections, average delays are 10 to 15 seconds.
- **LOS C** still represents stable operation, but periodic backups of a few vehicles may develop behind turning vehicles. Most drivers begin to feel restricted, but not objectionably so. At signalized intersections, average vehicle delays are 20 to 35 seconds. At unsignalized intersections, average delays are 15 to 25 seconds.
- **LOS D** represents increasing traffic restrictions as the intersection approaches instability. Delays to approaching vehicles may be substantial during short peaks within the peak period, but periodic clearance of long lines occurs, thus preventing excessive backups. At signalized intersections, average vehicle delays are 35 to 55 seconds. At unsignalized intersections, average delays are 25 to 35 seconds.
- **LOS E** represents the capacity of the intersection. At signalized intersections, average vehicle delays are 55 to 80 seconds. At unsignalized intersections, average delays are 35 to 50 seconds.
- **LOS F** represents jammed conditions where the intersection is over capacity and acceptable gaps for unsignalized intersections in the mainline traffic flow are minimal. At signalized intersections, average vehicle delays exceed 80 seconds. At unsignalized intersections, average delays exceed 50 seconds.

PART B – PEAK HOUR INTERSECTION OPERATING CONDITIONS

B1. Construction Year 2015 – Existing Transportation System

The Construction Year 2015 traffic volumes were evaluated with the existing geometrics and traffic control at the study intersections along the Main Street corridor. The Synchro traffic model was calibrated with the existing peak hour factors, percent heavy vehicles, speed limits, roadway geometry, signal timing and phasing, and other factors.

The Construction Year 2015 peak hour LOS, delay, and traffic queues for each movement at the study intersections are shown on Exhibit 6. As shown, all turning movements at the study intersections are expected to operate acceptably at LOS C or better during the peak hours with the Construction Year 2015 traffic volumes. The capacity analysis worksheets for this traffic scenario are located in Appendix C1.

B2. Design Year 2035 – Existing Transportation System

The Design Year 2035 traffic volumes were evaluated with the existing geometrics and traffic control at the study intersections along the Main Street corridor and the calibrated traffic model. The peak hour LOS, delay, and traffic queues for each movement at the study intersections are shown on Exhibit 7. As shown, the westbound left-turn movement at the Main Street intersection with Green Bay Road/Buntrock Avenue is expected to operate unacceptably at LOS E during the weekday evening peak hour. By increasing green time for the eastbound/westbound traffic movements at this intersection, traffic operations can be improved to acceptable levels. Turning movements at all other the study intersections are expected to continue to operate acceptably at LOS D or better during the peak hours with the Design Year 2035 traffic volumes.

The 95th percentile queue for the northbound right-turn movement at the Main Street intersection with Green Bay Road/Buntrock Avenue is expected to exceed the amount of available storage by at least 45 feet. Average queues for this movement are expected to be about 65 feet. Since existing constraints prevent the extension of this turn lane, and turn lane extensions are not typically recommended until queues exceed storage by at least 50 feet, no improvements are recommended to mitigate this condition. All other traffic queues at the study intersections are expected to be within the amount of available storage.

The capacity analysis worksheets for this traffic scenario are located in Appendix C2.

B3. Design Year 2035 – Improved Transportation System

To mitigate the unacceptable traffic condition expected at the Main Street intersection with Green Bay Road/Buntrock Avenue, it is recommended to adjust the signal timings to provide additional green time to the eastbound/westbound traffic movements during the weekday morning peak hour only. With this change, all turning movements at this intersection are expected to operate acceptably at LOS D or better during the peak hours. Since the change is recommended only for the weekday morning peak hour, the reported queues for the northbound right-turn lane are not expected to lengthen during the weekday evening peak hour.

None of the planned improvements for the Main Street corridor impact the intersection capacity analysis within the Synchro traffic model. Therefore, the impact of these improvements cannot be measured in terms of LOS, delay, queues, etc.

The peak hour LOS, delay, and traffic queues for each movement at the study intersections with the above signal timing improvement are shown on Exhibit 8. The capacity analysis worksheets for this traffic scenario are located in Appendix C3.

CHAPTER V – RECOMMENDATIONS & CONCLUSION

PART A – RECOMMENDED IMPROVEMENTS

The improvements being planned for the Main Street corridor and the additional improvements recommended to increase safety and maintain acceptable traffic operations through the Design Year 2035 are discussed below and shown on Exhibit 9.

- Prior to Freistadt Road, southbound Main Street widens to allow two southbound through lanes which turn into one through lane and one left-turn lane at Riverview Drive. No advanced signing is provided to alert motorists to the lane drop. No crashes have been reported for southbound Main Street in this roadway section, but some observers have reported that this situation causes sudden lane shifts from motorist unfamiliar with the area, and many "near-miss collisions."

  Recommendation: To mitigate the lane drop, it is recommended to install a "Left Lane Must Turn Left – At Riverview Dr." sign at appropriate intervals in advance of the lane drop at Riverview Drive.

- Since all study intersections are expected to operate with acceptable delays with the Construction Year 2015 traffic volumes during the peak hours, no additional changes are recommended for this analysis year. As traffic volumes increase to the Design Year 2035 levels, additional green time for the eastbound/westbound traffic movements may be needed at the Main Street intersection with Green Bay Road/Buntrock Avenue to maintain acceptable LOS.

  Recommendation: Periodically review traffic operations at the Main Street intersection with Green Bay Road/Buntrock Avenue to determine when signal timing adjustments may need to be implemented.

PART B – CONCLUSION

The planned resurfacing improvements to the Main Street intersection and other improvements listed above are expected to result in acceptable traffic operating conditions with the Construction Year 2015 and Design Year 2035 traffic volumes.

Thiensville, Wisconsin

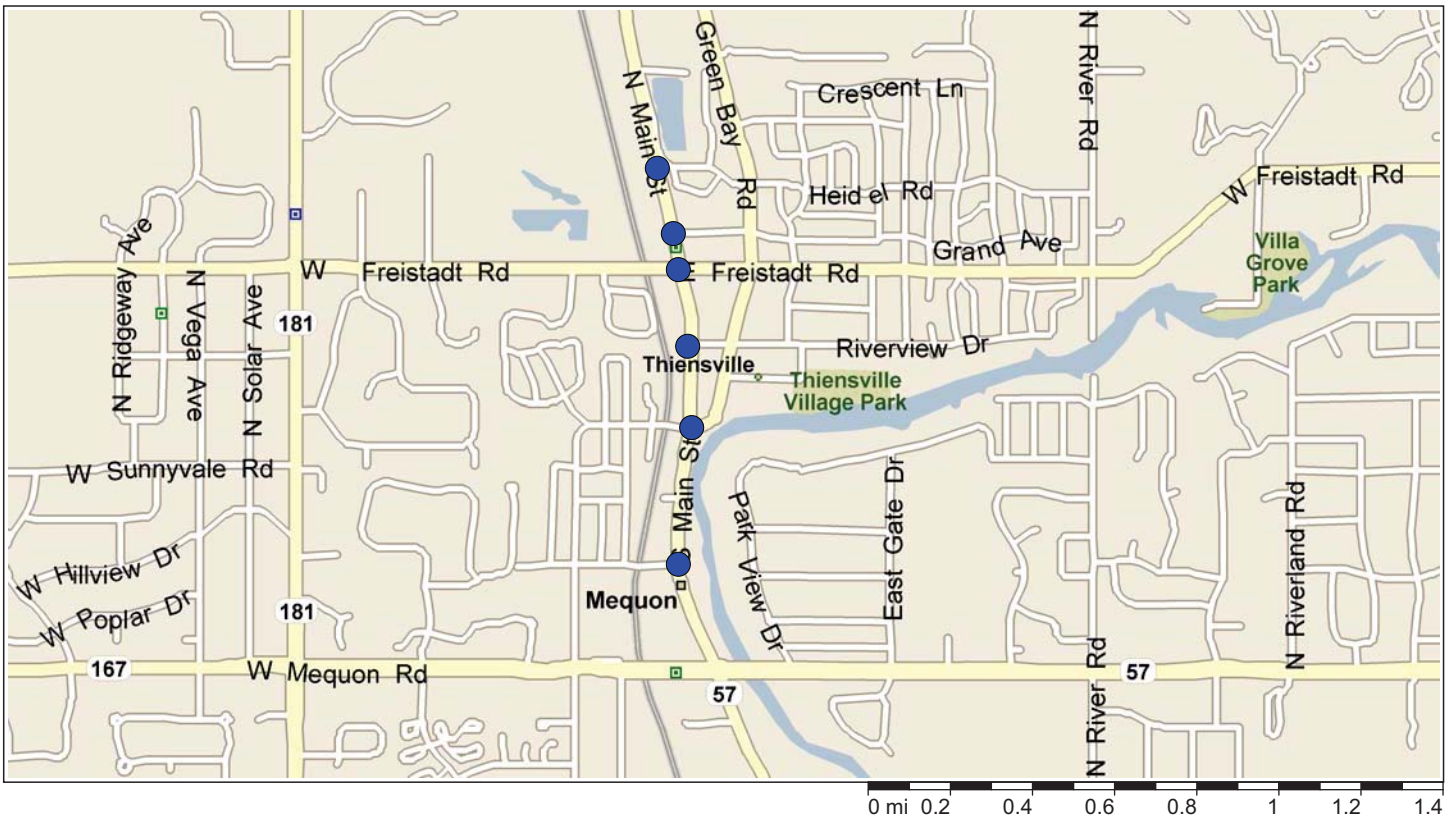

LEGEND

- Study Area Intersection

Copyright © and (P) 1988–2012 Microsoft Corporation and/or its suppliers. All rights reserved. http://www.microsoft.com/streets /
Certain mapping and direction data © 2012 NAVTEQ. All rights reserved. The Data for areas of Canada includes information taken with permission from Canadian authorities, including: © Her Majesty the Queen in Right of Canada, © Queen's Printer for Ontario. NAVTEQ and NAVTEQ ON BOARD are trademarks of NAVTEQ. © 2012 Tele Atlas North America, Inc. All rights reserved. Tele Atlas and Tele Atlas North America are trademarks of Tele Atlas, Inc. © 2012 by Applied Geographic Solutions. Al l rights reserved. Portions © Copyright 2012 by Woodall Publications Corp. All ri ghts reserved.

TADI
TRAFFIC ANALYSIS & DESIGN, INC.

EXHIBIT DATE: 8-20-14

N

EXHIBIT 1
PROJECT LOCATION MAP
MAIN STREET CORRIDOR
THIENSVILLE, WISCONSIN

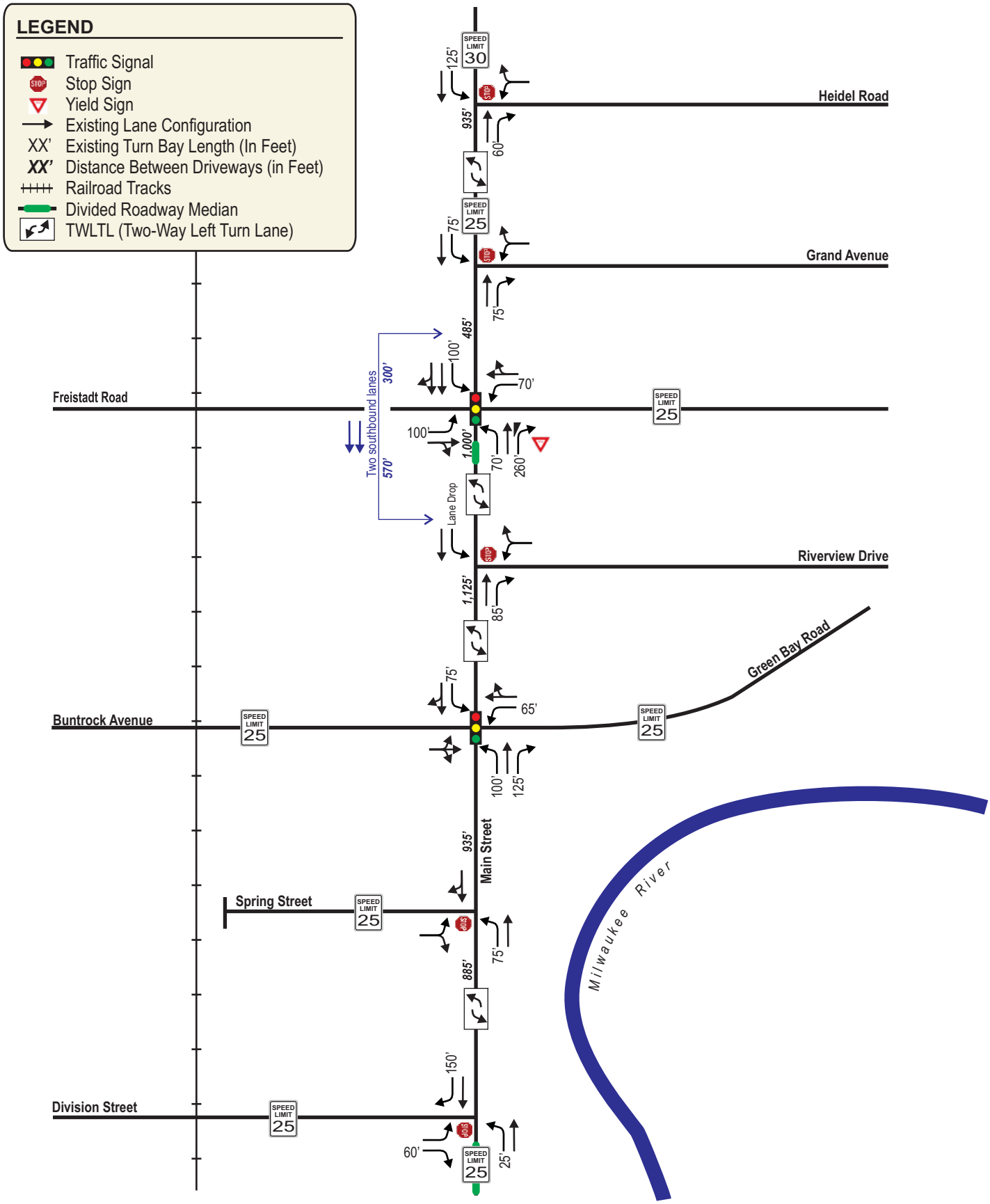

TADI
TRAFFIC ANALYSIS & DESIGN, INC.
EXHIBIT DATE: 8-20-14

N
NOT TO SCALE

EXHIBIT 2
EXISTING TRANSPORTATION DETAIL
MAIN STREET CORRIDOR
THIENSVILLE, WISCONSIN

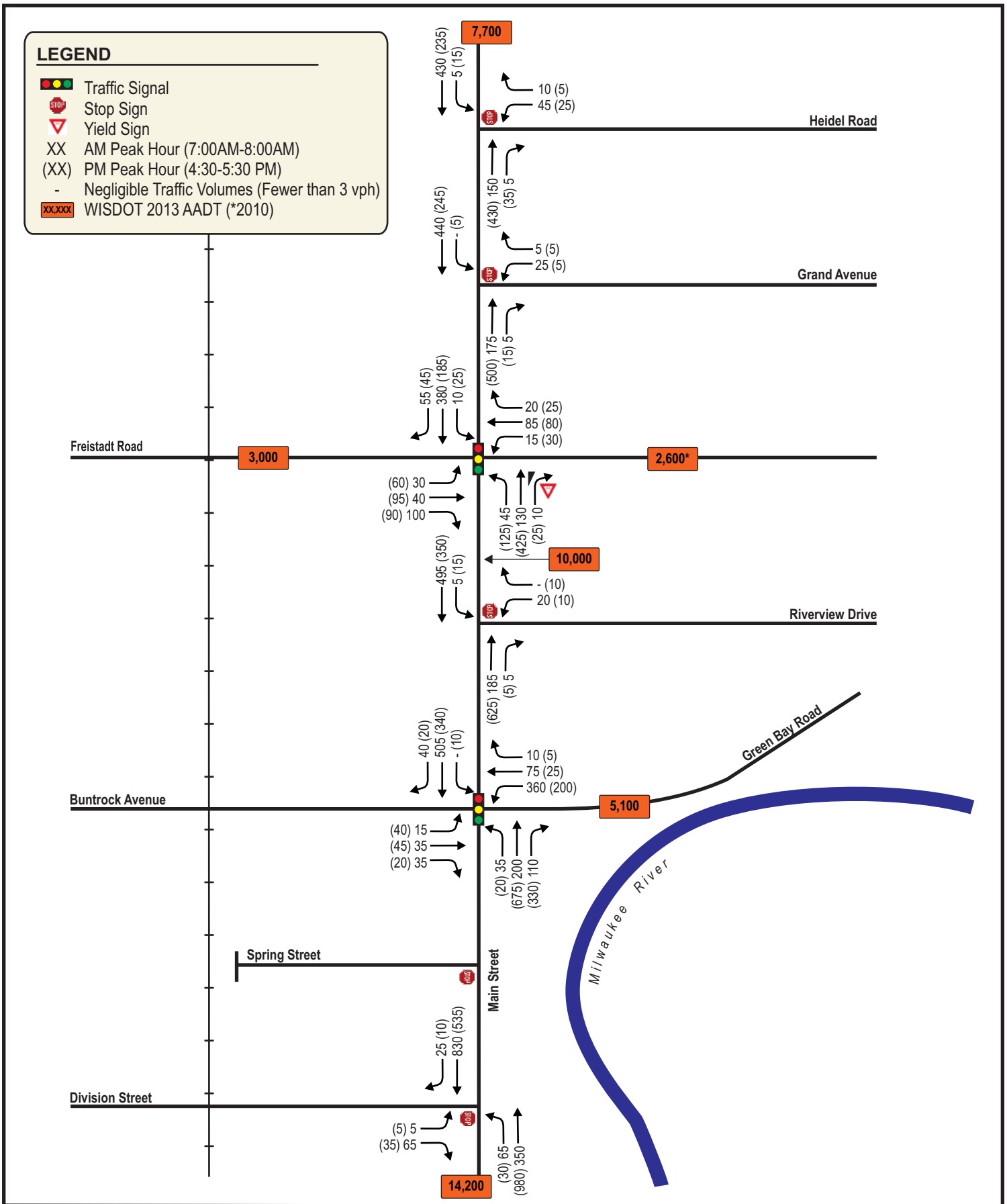

TADI
TRAFFIC ANALYSIS & DESIGN, INC.
EXHIBIT DATE: 8-20-14

N
NOT TO SCALE

EXHIBIT 3
EXISTING 2014 TRAFFIC VOLUMES
MAIN STREET CORRIDOR
THIENSVILLE, WISCONSIN

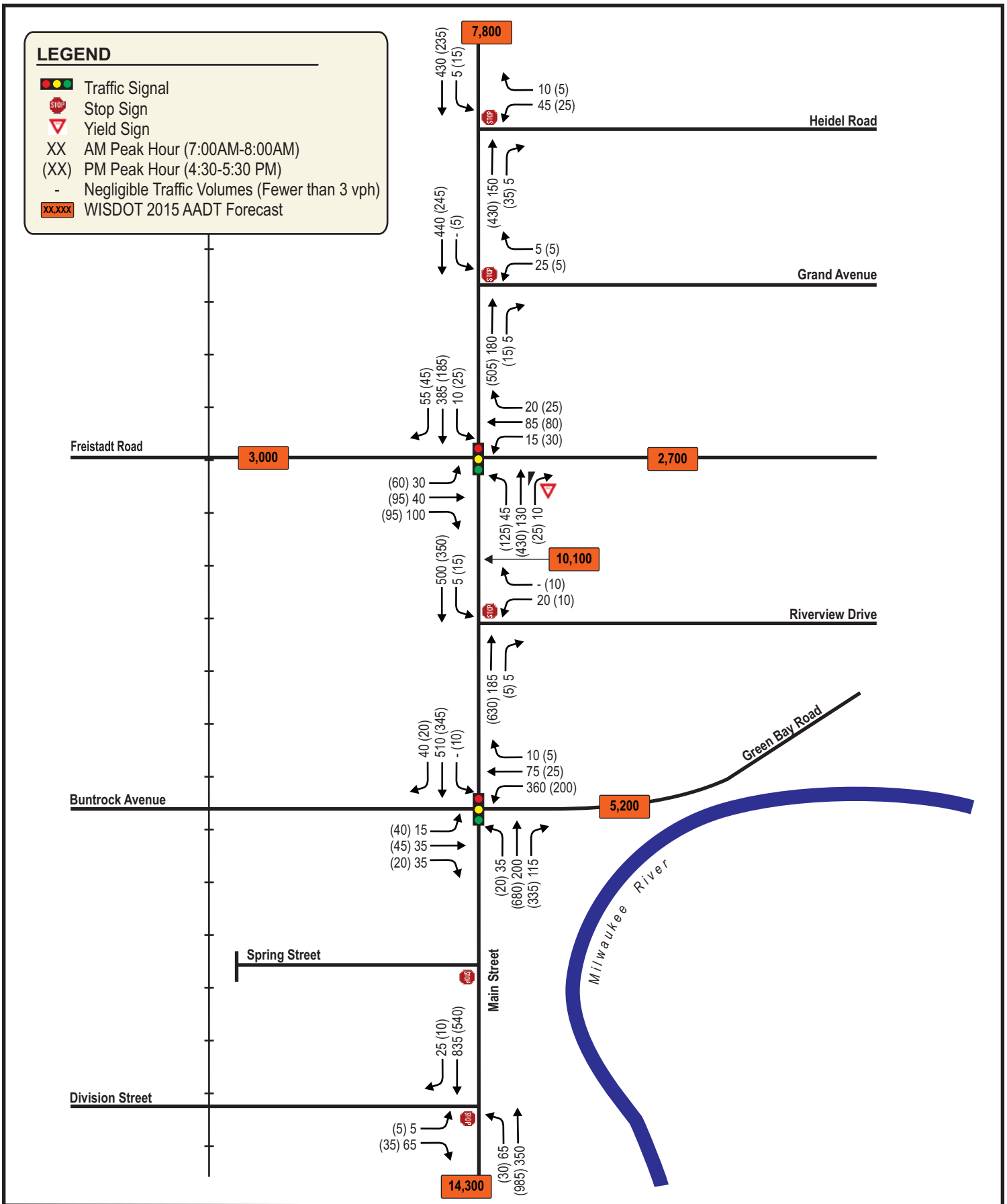

TADI
TRAFFIC ANALYSIS & DESIGN, INC.
EXHIBIT DATE: 8-20-14

N
NOT TO SCALE

EXHIBIT 4
CONSTRUCTION YEAR 2015 TRAFFIC VOLUMES
MAIN STREET CORRIDOR
THIENSVILLE, WISCONSIN

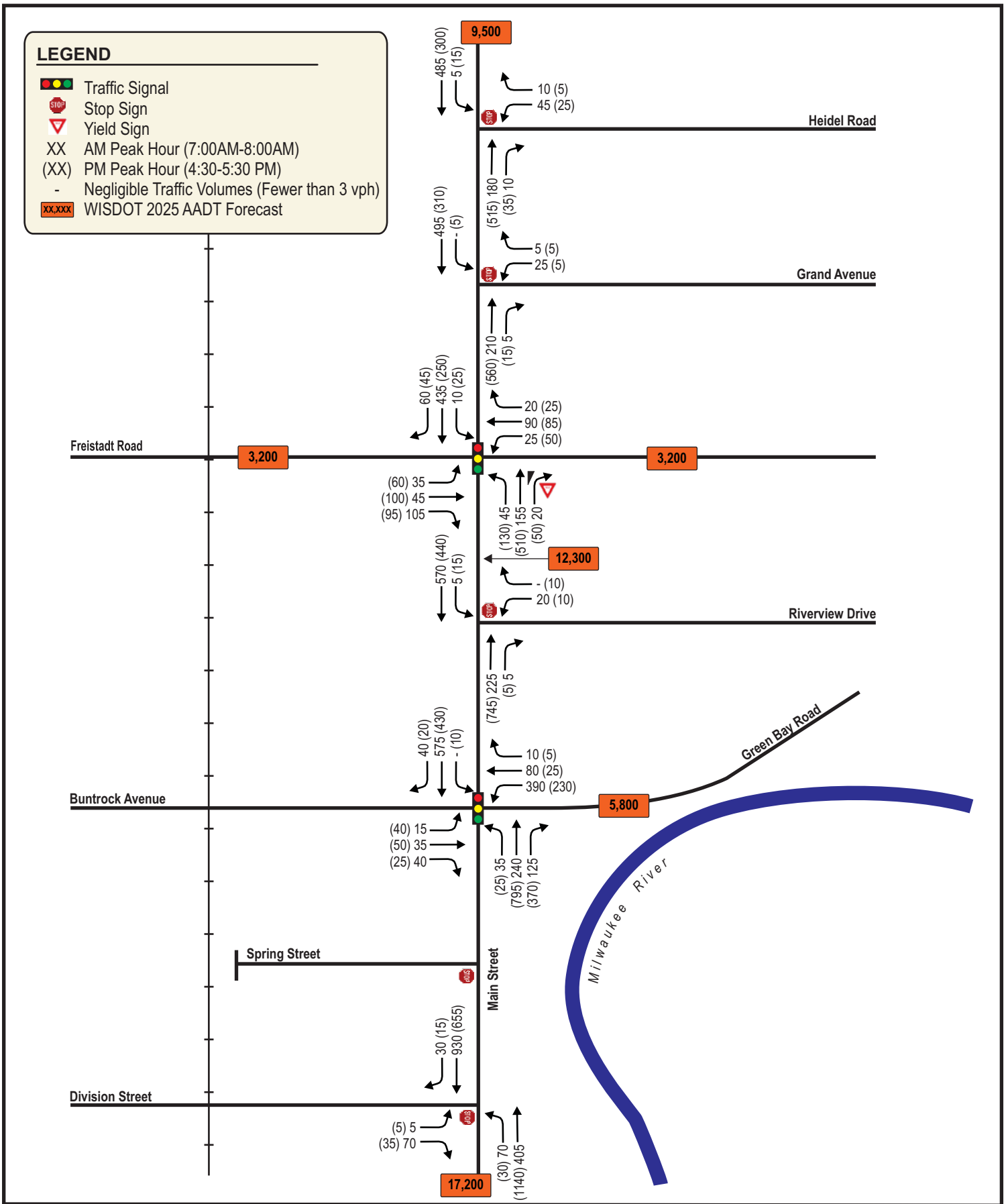

TADI
TRAFFIC ANALYSIS & DESIGN, INC.
EXHIBIT DATE: 8-20-14

N
NOT TO SCALE

EXHIBIT 5
DESIGN YEAR 2025 TRAFFIC VOLUMES
MAIN STREET CORRIDOR
THIENSVILLE, WISCONSIN

AM Peak Hour		Construction Year 2015 Traffic Volumes - Existing System														
		Delay (s/veh) and LOS										Queues				
		Movement						Approach		Intersection		Left Turn		Through	Right Turn	
	Appr.	Left		Through		Right										
Intersection	Dir	Delay	LOS	Delay	LOS	Delay	LOS	Delay	LOS	Delay	LOS	Storage	95th % Queue	95th % Queue	Storage	95th % Queue
Main Street & Heidel Road	WB	12.8	B	-	-	12.8	B	12.8	B	1.2	A	-	-	9 Ft.	-	-
	NB	-	-	0.0	A	0.0	A	0.0	A			-	-	0 Ft.	60 Ft.	0 Ft.
	SB	7.6	A	0.0	A	-	-	0.1	A			125 Ft.	0 Ft.	0 Ft.	-	-
Main Street & Grand Avenue	WB	12.7	B	-	-	12.7	B	12.7	B	0.6	A	-	-	5 Ft.	-	-
	NB	-	-	0.0	A	0.0	A	0.0	A			-	-	0 Ft.	75 Ft.	0 Ft.
	SB	7.7	A	0.0	A	-	-	0.0	A			75 Ft.	0 Ft.	0 Ft.	-	-
Main Street & Freistadt Road	EB	19.7	B	19.2	B	19.2	B	19.3	B	8.2	A	100 Ft.	25 Ft.	83 Ft.	-	-
	WB	20.9	C	18.0	B	18.0	B	18.4	B			70 Ft.	16 Ft.	63 Ft.	-	-
	NB	4.1	A	3.1	A	2.8	A	3.4	A			70 Ft.	17 Ft.	35 Ft.	260 Ft.	6 Ft.
	SB	3.4	A	3.4	A	3.4	A	3.4	A			100 Ft.	6 Ft.	51 Ft.	-	-
Main Street & Riverview Drive	WB	13.8	B	-	-	13.8	B	13.8	B	0.5	A	-	-	4 Ft.	-	-
	NB	-	-	0.0	A	0.0	A	0.0	A			-	-	0 Ft.	85 Ft.	0 Ft.
	SB	7.7	A	0.0	A	-	-	0.1	A			115 Ft.	0 Ft.	0 Ft.	-	-
Main Street & Buntrock Avenue/Green Bay Road	EB	13.2	B	13.2	B	13.2	B	13.2	B	19.8	B	-	-	48 Ft.	-	-
	WB	33.2	C	13.1	B	13.1	B	29.4	C			65 Ft.*	256 Ft.	48 Ft.	-	-
	NB	24.3	C	10.0	A	9.4	A	11.2	B			100 Ft.	26 Ft.	82 Ft.	125 Ft.	50 Ft.
	SB	11.4	B	18.4	B	18.4	B	18.4	B			75 Ft.	2 Ft.	266 Ft.	-	-
Main Street & Division Street	EB	21.0	C	-	-	22.2	C	22.1	C	1.7	A	60 Ft.	2 Ft.	27 Ft.	-	-
	NB	11.1	B	0.0	A	-	-	1.7	A			25 Ft.	10 Ft.	0 Ft.	-	-
	SB	-	-	0.0	A	0.0	A	0.0	A			-	-	0 Ft.	150 Ft.	0 Ft.

PM Peak Hour		Construction Year 2015 Traffic Volumes - Existing System														
		Delay (s/veh) and LOS										Queues				
		Movement						Approach		Intersection		Left Turn		Through	Right Turn	
	Appr.	Left		Through		Right										
Intersection	Dir	Delay	LOS	Delay	LOS	Delay	LOS	Delay	LOS	Delay	LOS	Storage	95th % Queue	95th % Queue	Storage	95th % Queue
Main Street & Heidel Road	WB	12.8	B	-	-	12.8	B	12.8	B	0.7	A	-	-	4 Ft.	-	-
	NB	-	-	0.0	A	0.0	A	0.0	A			-	-	0 Ft.	60 Ft.	0 Ft.
	SB	8.3	A	0.0	A	-	-	0.5	A			125 Ft.	0 Ft.	0 Ft.	-	-
Main Street & Grand Avenue	WB	12.7	B	-	-	12.7	B	12.7	B	0.2	A	-	-	2 Ft.	-	-
	NB	-	-	0.0	A	0.0	A	0.0	A			-	-	0 Ft.	75 Ft.	0 Ft.
	SB	8.6	A	0.0	A	-	-	0.2	A			75 Ft.	0 Ft.	0 Ft.	-	-
Main Street & Freistadt Road	EB	19.4	B	18.7	B	18.7	B	18.8	B	9.0	A	100 Ft.	42 Ft.	107 Ft.	-	-
	WB	21.4	C	17.1	B	17.1	B	18.1	B			70 Ft.	25 Ft.	62 Ft.	-	-
	NB	4.7	A	4.9	A	3.5	A	4.8	A			70 Ft.	42 Ft.	131 Ft.	260 Ft.	11 Ft.
	SB	6.6	A	3.8	A	3.8	A	4.0	A			100 Ft.	12 Ft.	30 Ft.	-	-
Main Street & Riverview Drive	WB	14.7	B	-	-	14.7	B	14.7	B	0.4	A	-	-	4 Ft.	-	-
	NB	-	-	0.0	A	0.0	A	0.0	A			-	-	0 Ft.	85 Ft.	0 Ft.
	SB	9.1	A	0.0	A	-	-	0.4	A			115 Ft.	1 Ft.	0 Ft.	-	-
Main Street & Buntrock Avenue/Green Bay Road	EB	16.0	B	16.0	B	16.0	B	16.0	B	9.2	A	-	-	61 Ft.	-	-
	WB	20.6	C	15.3	B	15.3	B	19.9	B			65 Ft.*	114 Ft.	23 Ft.	-	-
	NB	7.1	A	8.2	A	5.8	A	7.4	A			100 Ft.	12 Ft.	292 Ft.	125 Ft.	121 Ft.
	SB	11.6	B	5.6	A	5.6	A	5.8	A			75 Ft.	8 Ft.	125 Ft.	-	-
Main Street & Division Street	EB	21.1	C	-	-	12.3	B	13.4	B	0.5	A	60 Ft.	1 Ft.	6 Ft.	-	-
	NB	8.7	A	0.0	A	-	-	0.3	A			25 Ft.	2 Ft.	0 Ft.	-	-
	SB	-	-	0.0	A	0.0	A	0.0	A			-	-	0 Ft.	150 Ft.	0 Ft.

The WB approach from Green Bay Road operates with a continuous left-turn lane and a 65-foot through lane since the majority of traffic is for the left-turn movement.

TADi TRAFFIC ANALYSIS & DESIGN, INC.

EXHIBIT DATE: 8-20-14

N

NOT TO SCALE

EXHIBIT 6
CONSTRUCTION YEAR 2015 PEAK HOUR CAPACITY/LOS ANALYSIS
MAIN STREET CORRIDOR
THIENSVILLE, WISCONSIN

AM Peak Hour		Design Year 2035 Traffic Volumes - Existing System														
		Delay (s/veh) and LOS										Queues				
		Movement						Approach		Intersection		Left Turn		Through	Right Turn	
	Appr.	Left		Through		Right							95th %	95th %		95th %
Intersection	Dir	Delay	LOS	Delay	LOS	Delay	LOS	Delay	LOS	Delay	LOS	Storage	Queue	Queue	Storage	Queue
Main Street & Heidel Road	WB	14.0	B	-	-	14.0	B	14.0	B	1.2	A	-	-	12 Ft.	-	-
	NB	-	-	0.0	A	0.0	A	0.0	A			-	-	0 Ft.	60 Ft.	0 Ft.
	SB	7.7	A	0.0	A	-	-	0.1	A			125 Ft.	0 Ft.	0 Ft.	-	-
Main Street & Grand Avenue	WB	13.8	B	-	-	13.8	B	13.8	B	0.5	A	-	-	6 Ft.	-	-
	NB	-	-	0.0	A	0.0	A	0.0	A			-	-	0 Ft.	75 Ft.	0 Ft.
	SB	7.8	A	0.0	A	-	-	0.0	A			75 Ft.	0 Ft.	0 Ft.	-	-
Main Street & Freistadt Road	EB	19.6	B	18.9	B	18.9	B	19.0	B	8.4	A	100 Ft.	28 Ft.	90 Ft.	-	-
	WB	21.2	C	17.7	B	17.7	B	18.3	B			70 Ft.	22 Ft.	68 Ft.	-	-
	NB	5.0	A	3.6	A	3.2	A	3.8	A			70 Ft.	18 Ft.	46 Ft.	260 Ft.	9 Ft.
	SB	4.0	A	3.9	A	3.9	A	3.9	A			100 Ft.	6 Ft.	63 Ft.	-	-
Main Street & Riverview Drive	WB	15.7	B	-	-	15.7	B	15.7	B	0.5	A	-	-	6 Ft.	-	-
	NB	-	-	0.0	A	0.0	A	0.0	A			-	-	0 Ft.	85 Ft.	0 Ft.
	SB	7.9	A	0.0	A	-	-	0.1	A			115 Ft.	1 Ft.	0 Ft.	-	-
Main Street & Buntrock Avenue/Green Bay Road	EB	13.3	B	13.3	B	13.3	B	13.3	B	30.0	C	-	-	51 Ft.	-	-
	WB	55.6	E	13.2	B	13.2	B	47.6	D			65 Ft.*	313 Ft.	53 Ft.	-	-
	NB	31.4	C	10.5	B	9.6	A	11.9	B			100 Ft.	32 Ft.	103 Ft.	125 Ft.	57 Ft.
	SB	12.5	B	30.2	C	30.2	C	30.2	C			75 Ft.	2 Ft.	350 Ft.	-	-
Main Street & Division Street	EB	24.9	C	-	-	29.8	D	29.5	D	2.0	A	60 Ft.	2 Ft.	41 Ft.	-	-
	NB	12.3	B	0.0	A	-	-	1.8	A			25 Ft.	13 Ft.	0 Ft.	-	-
	SB	-	-	0.0	A	0.0	A	0.0	A			-	-	0 Ft.	150 Ft.	0 Ft.

PM Peak Hour		Design Year 2035 Traffic Volumes - Existing System														
		Delay (s/veh) and LOS										Queues				
		Movement						Approach		Intersection		Left Turn		Through	Right Turn	
	Appr.	Left		Through		Right							95th %	95th %		95th %
Intersection	Dir	Delay	LOS	Delay	LOS	Delay	LOS	Delay	LOS	Delay	LOS	Storage	Queue	Queue	Storage	Queue
Main Street & Heidel Road	WB	14.2	B	-	-	14.2	B	14.2	B	0.6	A	-	-	5 Ft.	-	-
	NB	-	-	0.0	A	0.0	A	0.0	A			-	-	0 Ft.	60 Ft.	0 Ft.
	SB	8.6	A	0.0	A	-	-	0.4	A			125 Ft.	1 Ft.	0 Ft.	-	-
Main Street & Grand Avenue	WB	14.1	B	-	-	14.1	B	14.1	B	0.2	A	-	-	2 Ft.	-	-
	NB	-	-	0.0	A	0.0	A	0.0	A			-	-	0 Ft.	75 Ft.	0 Ft.
	SB	9.0	A	0.0	A	-	-	0.1	A			75 Ft.	1 Ft.	0 Ft.	-	-
Main Street & Freistadt Road	EB	19.1	B	18.1	B	18.1	B	18.4	B	9.4	A	100 Ft.	44 Ft.	114 Ft.	-	-
	WB	21.7	C	16.7	B	16.7	B	18.2	B			70 Ft.	37 Ft.	67 Ft.	-	-
	NB	6.0	A	6.4	A	4.1	A	6.2	A			70 Ft.	51 Ft.	190 Ft.	260 Ft.	20 Ft.
	SB	9.2	A	4.5	A	4.5	A	4.8	A			100 Ft.	13 Ft.	43 Ft.	-	-
Main Street & Riverview Drive	WB	17.1	C	-	-	17.1	C	17.1	C	0.4	A	-	-	5 Ft.	-	-
	NB	-	-	0.0	A	0.0	A	0.0	A			-	-	0 Ft.	85 Ft.	0 Ft.
	SB	9.7	A	0.0	A	-	-	0.3	A			115 Ft.	2 Ft.	0 Ft.	-	-
Main Street & Buntrock Avenue/Green Bay Road	EB	15.4	B	15.4	B	15.4	B	15.4	B	12.5	B	-	-	65 Ft.	-	-
	WB	20.9	C	14.6	B	14.6	B	20.1	C			65 Ft.*	138 Ft.	26 Ft.	-	-
	NB	10.1	B	14.9	B	7.3	A	12.5	B			100 Ft.	16 Ft.	536 Ft.	125 Ft.	168 Ft.
	SB	18.9	B	7.4	A	7.4	A	7.7	A			75 Ft.	10 Ft.	201 Ft.	-	-
Main Street & Division Street	EB	26.1	D	-	-	14.1	B	15.4	C	0.5	A	60 Ft.	2 Ft.	8 Ft.	-	-
	NB	9.2	A	0.0	A	-	-	0.2	A			25 Ft.	3 Ft.	0 Ft.	-	-
	SB	-	-	0.0	A	0.0	A	0.0	A			-	-	0 Ft.	150 Ft.	0 Ft.

The WB approach from Green Bay Road operates with a continuous left-turn lane and a 65-foot through lane since the majority of traffic is for the left-turn movement.

TADI
TRAFFIC ANALYSIS & DESIGN, INC.
EXHIBIT DATE: 8-20-14

N
NOT TO SCALE

EXHIBIT 7
DESIGN YEAR 2035 PEAK HOUR CAPACITY/LOS ANALYSIS
MAIN STREET CORRIDOR
THIENSVILLE, WISCONSIN

AM Peak Hour		Design Year 2035 Traffic Volumes - Improved System														
		Delay (s/veh) and LOS										Queues				
		Movement						Approach		Intersection		Left Turn		Through	Right Turn	
	Appr.	Left		Through		Right										
Intersection	Dir	Delay	LOS	Delay	LOS	Delay	LOS	Delay	LOS	Delay	LOS	Storage	95th % Queue	95th % Queue	Storage	95th % Queue
Main Street & Heidel Road	WB	14.0	B	-	-	14.0	B	14.0	B	1.2	A	-	-	12 Ft.	-	-
	NB	-	-	0.0	A	0.0	A	0.0	A			-	-	0 Ft.	60 Ft.	0 Ft.
	SB	7.7	A	0.0	A	-	-	0.1	A			125 Ft.	0 Ft.	0 Ft.	-	-
Main Street & Grand Avenue	WB	13.8	B	-	-	13.8	B	13.8	B	0.5	A	-	-	6 Ft.	-	-
	NB	-	-	0.0	A	0.0	A	0.0	A			-	-	0 Ft.	75 Ft.	0 Ft.
	SB	7.8	A	0.0	A	-	-	0.0	A			75 Ft.	0 Ft.	0 Ft.	-	-
Main Street & Freistadt Road	EB	19.6	B	18.9	B	18.9	B	19.0	B	8.4	A	100 Ft.	28 Ft.	90 Ft.	-	-
	WB	21.2	C	17.7	B	17.7	B	18.3	B			70 Ft.	22 Ft.	68 Ft.	-	-
	NB	5.0	A	3.6	A	3.2	A	3.8	A			70 Ft.	18 Ft.	46 Ft.	260 Ft.	9 Ft.
	SB	4.0	A	3.9	A	3.9	A	3.9	A			100 Ft.	6 Ft.	63 Ft.	-	-
Main Street & Riverview Drive	WB	15.7	B	-	-	15.7	B	15.7	B	0.5	A	-	-	6 Ft.	-	-
	NB	-	-	0.0	A	0.0	A	0.0	A			-	-	0 Ft.	85 Ft.	0 Ft.
	SB	7.9	A	0.0	A	-	-	0.1	A			115 Ft.	1 Ft.	0 Ft.	-	-
Main Street & Buntrock Avenue/Green Bay Road	EB	12.6	B	12.6	B	12.6	B	12.6	B	30.1	C	-	-	50 Ft.	-	-
	WB	46.0	D	12.6	B	12.6	B	39.8	D			65 Ft.*	304 Ft.	51 Ft.	-	-
	NB	33.1	C	11.1	B	10.1	B	12.6	B			100 Ft.	33 Ft.	106 Ft.	125 Ft.	59 Ft.
	SB	13.2	B	36.3	D	36.3	D	36.3	D			75 Ft.	2 Ft.	405 Ft.	-	-
Main Street & Division Street	EB	24.9	C	-	-	29.8	D	29.5	D	2.0	A	60 Ft.	2 Ft.	41 Ft.	-	-
	NB	12.3	B	0.0	A	-	-	1.8	A			25 Ft.	13 Ft.	0 Ft.	-	-
	SB	-	-	0.0	A	0.0	A	0.0	A			-	-	0 Ft.	85 Ft.	0 Ft.

PM Peak Hour		Design Year 2035 Traffic Volumes - Improved System														
		Delay (s/veh) and LOS										Queues				
		Movement						Approach		Intersection		Left Turn		Through	Right Turn	
	Appr.	Left		Through		Right										
Intersection	Dir	Delay	LOS	Delay	LOS	Delay	LOS	Delay	LOS	Delay	LOS	Storage	95th % Queue	95th % Queue	Storage	95th % Queue
Main Street & Heidel Road	WB	14.2	B	-	-	14.2	B	14.2	B	0.6	A	-	-	5 Ft.	-	-
	NB	-	-	0.0	A	0.0	A	0.0	A			-	-	0 Ft.	60 Ft.	0 Ft.
	SB	8.6	A	0.0	A	-	-	0.4	A			125 Ft.	1 Ft.	0 Ft.	-	-
Main Street & Grand Avenue	WB	14.1	B	-	-	14.1	B	14.1	B	0.2	A	-	-	2 Ft.	-	-
	NB	-	-	0.0	A	0.0	A	0.0	A			-	-	0 Ft.	75 Ft.	0 Ft.
	SB	9.0	A	0.0	A	-	-	0.1	A			75 Ft.	1 Ft.	0 Ft.	-	-
Main Street & Freistadt Road	EB	19.1	B	18.1	B	18.1	B	18.4	B	9.4	A	100 Ft.	44 Ft.	114 Ft.	-	-
	WB	21.7	C	16.7	B	16.7	B	18.2	B			70 Ft.	37 Ft.	67 Ft.	-	-
	NB	6.0	A	6.4	A	4.1	A	6.2	A			70 Ft.	51 Ft.	190 Ft.	260 Ft.	20 Ft.
	SB	9.2	A	4.5	A	4.5	A	4.8	A			100 Ft.	13 Ft.	43 Ft.	-	-
Main Street & Riverview Drive	WB	17.1	C	-	-	17.1	C	17.1	C	0.4	A	-	-	5 Ft.	-	-
	NB	-	-	0.0	A	0.0	A	0.0	A			-	-	0 Ft.	85 Ft.	0 Ft.
	SB	9.7	A	0.0	A	-	-	0.3	A			115 Ft.	2 Ft.	0 Ft.	-	-
Main Street & Buntrock Avenue/Green Bay Road	EB	15.4	B	15.4	B	15.4	B	15.4	B	12.5	B	-	-	65 Ft.	-	-
	WB	20.9	C	14.6	B	14.6	B	20.1	C			65 Ft.*	138 Ft.	26 Ft.	-	-
	NB	10.1	B	14.9	B	7.3	A	12.5	B			100 Ft.	16 Ft.	536 Ft.	125 Ft.	168 Ft.
	SB	18.9	B	7.4	A	7.4	A	7.7	A			75 Ft.	10 Ft.	201 Ft.	-	-
Main Street & Division Street	EB	26.1	D	-	-	14.1	B	15.4	C	0.5	A	60 Ft.	2 Ft.	8 Ft.	-	-
	NB	9.2	A	0.0	A	-	-	0.2	A			25 Ft.	3 Ft.	0 Ft.	-	-
	SB	-	-	0.0	A	0.0	A	0.0	A			-	-	0 Ft.	85 Ft.	0 Ft.

**The WB approach from Green Bay Road operates with a continuous left-turn lane and a 65-foot through lane since the majority of traffic is for the left-turn movement.*

TADi TRAFFIC ANALYSIS & DESIGN, INC.

EXHIBIT DATE: 8-20-14

N

NOT TO SCALE

EXHIBIT 8
DESIGN YEAR 2035 PEAK HOUR CAPACITY/LOS ANALYSIS WITH IMROVEMENTS
MAIN STREET CORRIDOR
THIENSVILLE, WISCONSIN

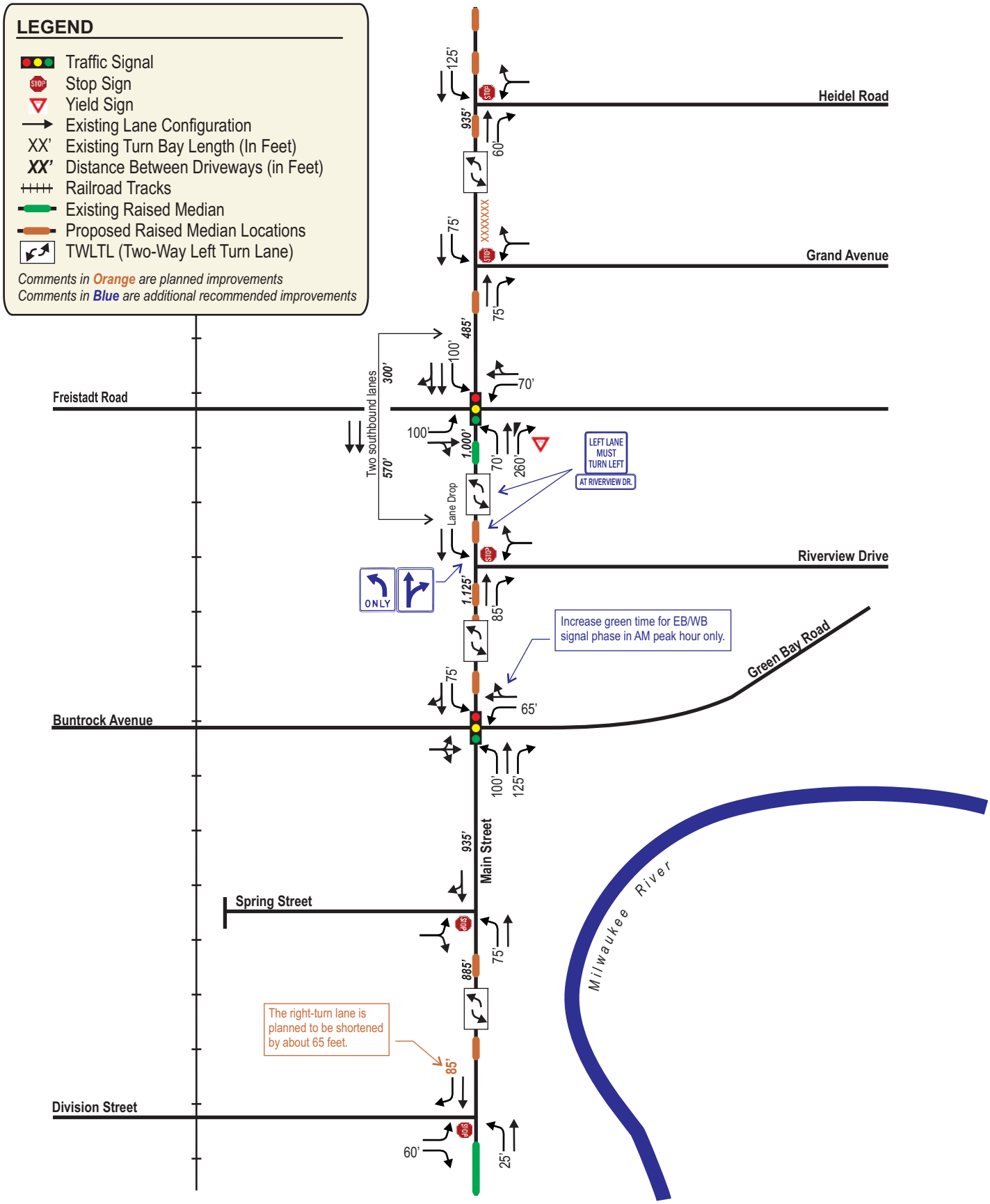

TADI
TRAFFIC ANALYSIS & DESIGN, INC.
EXHIBIT DATE: 8-20-14

N
NOT TO SCALE

EXHIBIT 9
PLANNED GEOMETRICS & RECOMMENDED IMPROVEMENTS
MAIN STREET CORRIDOR
THIENSVILLE, WISCONSIN

APPENDIX A1

TRAFFIC DATA COLLECTION

PEAK HOUR TURNING MOVEMENT COUNTS

Peak Hour Factor/Heavy Vehicle Percentage Summary

Intersection	Traffic Control	Peak Hour	Heavy Vehicle Percentage				PHF
			EB	WB	NB	SB	
Main Street & Heidel Road	Stop Sign	AM	-	2%	3%	1%	0.83
		PM	-	7%	1%	2%	0.95
Main Street & Grand Avenue	Stop Sign	AM	-	0%	4%	1%	0.80
		PM	-	0%	1%	1%	0.89
Main Street & Freistadt Road	Traffic Signal	AM	7%	2%	8%	1%	0.85
		PM	0%	2%	1%	1%	0.86
Main Street & Riverview Drive	Stop Sign	AM	-	0%	8%	2%	0.80
		PM	-	6%	1%	3%	0.92
Main Street & Buntrock Avenue/Green Bay Road	Traffic Signal	AM	4%	3%	5%	2%	0.77
		PM	1%	2%	1%	2%	0.94
Main Street & Division Street	Stop Sign	AM	2%	-	4%	2%	0.82
		PM	0%	-	1%	2%	0.96

Intersection Traffic Volume Report

Count Basics	Version 2013.J4.1		Page 1 of 11
Start Date:	Wednesday, April 02, 2014	Weekday	Schools in Session
Total Number of Hours Counted: 5		Non-Holiday	No Special Events

Base Information, Observed (5) Hour and Estimated (24) Hour Volume Summaries

Intersection of: Main St and

Site Information

Municipality	Village of Theinsville		
County	Ozaukee	WisDOT Region	SE
Traffic Control	Partial Stop Control		
Roadway Names		North Direction	↑
North Leg	Main St		
East Leg			
South Leg	Main St		
West Leg	Division St		
Special Considerations			
Schools	In Session		
Holidays	None		
Special Events	None		
Special Pedestrians Observed			
Pre-school children	None		
Elementry school age children	None		
Visually impaired (white cane/helper dog)	None		
Elderly/disabled (except wheelchairs)	None		
Wheelchairs/electric scooters	None		
Other (describe)	None	None	

Count Information

Hrs Counted:	6:30 AM-8:30 AM and 2:30 PM-5:30 PM				
1st Day of Count	Wednesday, April 02, 2014			Weather	
AM Peak Period	Wednesday, April 02, 2014			Clear & Dry	
Midday Peak Period				Clear & Dry	
PM Peak Period	Wednesday, April 02, 2014			Clear & Dry	
Calculated Peak Hours					
AM	7:00-8:00am	MD		PM	4:30-5:30pm
Peak Hours Selected for Analysis					
AM	7:00-8:00am	MD		PM	4:30-5:30pm
Daily/Seasonal Adjustment Group	(2) Urban Arterials & Collectors				
Count Expansion Group	(2) Urban Arterials & Collectors				
Daily/Seasonal Adjustment Factor	0.953	Count Expansion Factor	2.664		
Company Name	TADI			Manual Adj.	1.000
Observers	AM Peak Period	Amy S			
	Midday Peak Period				
	PM Peak Period	Amy S			
Comments	Version 2011.J4.1; Expansion Factor assumed 6:00AM to 8:00AM and 3:00PM to 6:00PM times on 2012 WisDOT Expansion Factor Spreadsheet.				

Observed 5 Hour Volume Summary

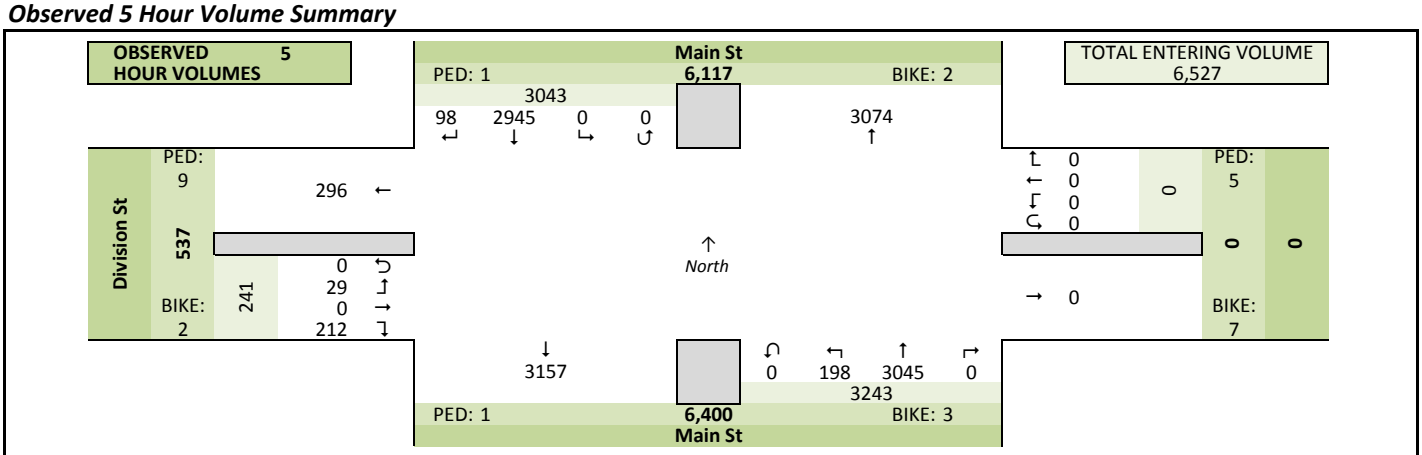

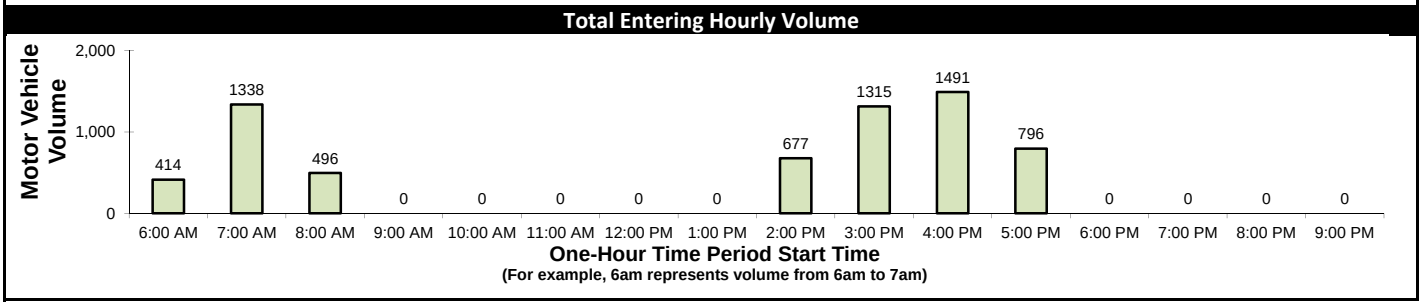

Estimated 24 Hour AADT

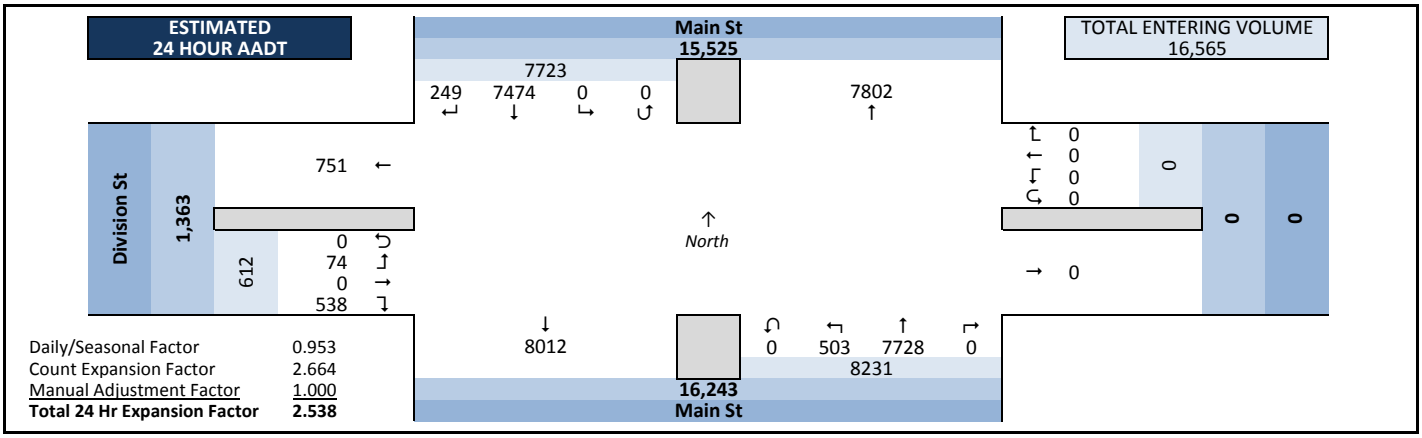

Daily/Seasonal Factor	0.953
Count Expansion Factor	2.664
Manual Adjustment Factor	1.000
Total 24 Hr Expansion Factor	**2.538**

Intersection Traffic Volume Report

Count Basics			Page 2 of 11
Start Date:	Wednesday, April 02, 2014	Weekday	Schools in Session
Total Number of Hours Counted: 5		Non-Holiday	No Special Events

Peak Hour Volume Graphical Summary

All Motor Vehicles

Main St and

AM Peak Hour Summary

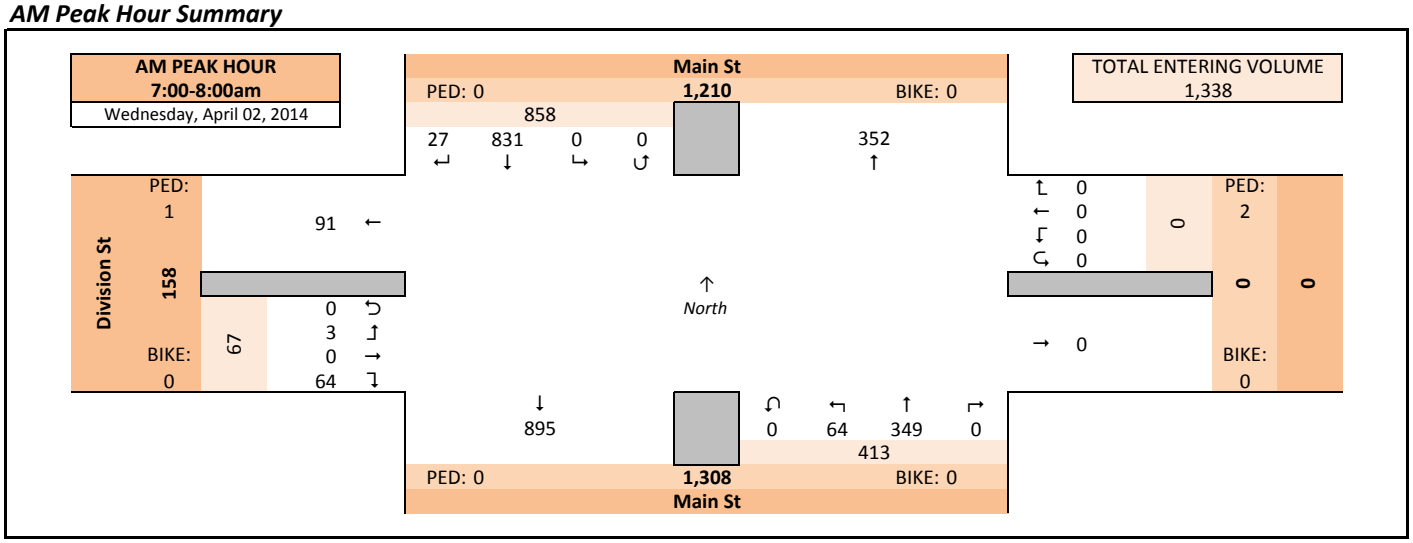

Midday (MD) Peak Hour Summary

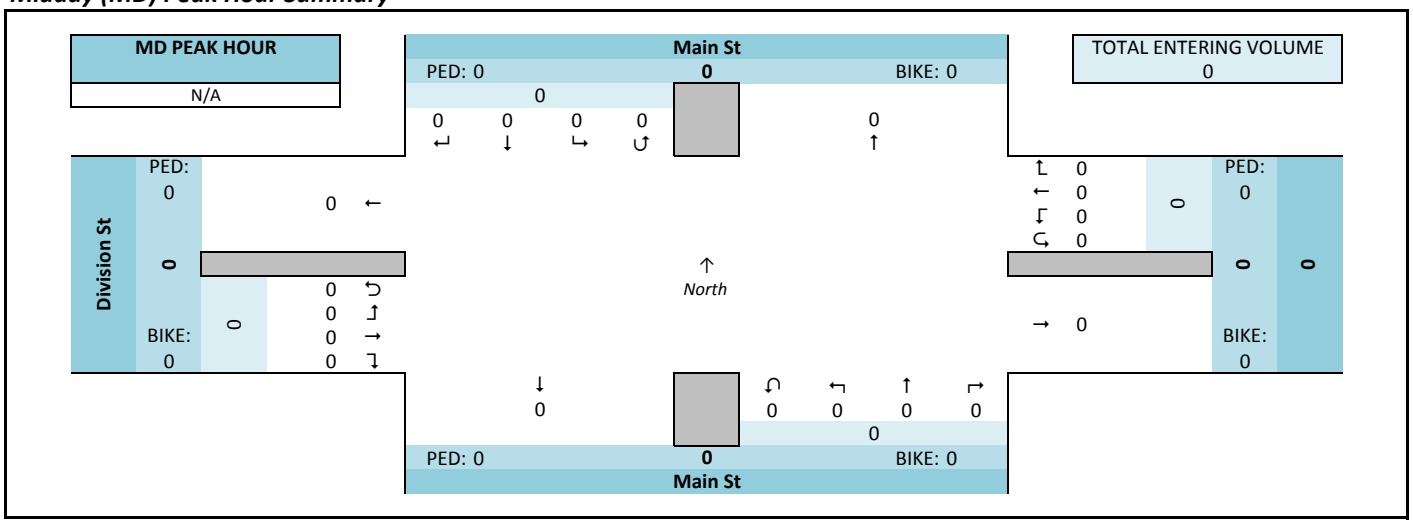

PM Peak Hour Summary

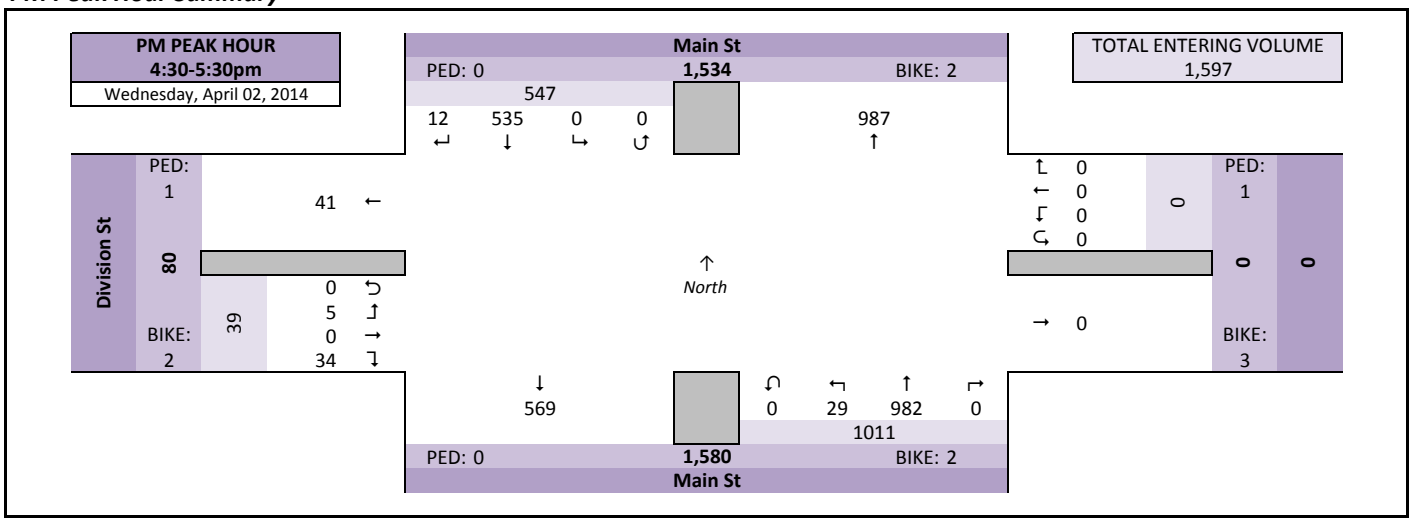

Intersection Traffic Volume Report

Count Basics			Page 3 of 11
Start Date:	Wednesday, April 02, 2014	Weekday	Schools in Session
Total Number of Hours Counted: 5		Non-Holiday	No Special Events

Peak Hour Volume Summary

All Motor Vehicles

Main St and

Peak Hour Volumes, Truck Percentages, and PHFs

Wednesday, April 02, 2014		From North					From East					From South					From West					
	AM Peak Hour	Main St					0					Main St					Division St					
	Start Time	Right	Thru	Left	U-Tn	Total	Right	Thru	Left	U-Tn	Total	Right	Thru	Left	U-Tn	Total	Right	Thru	Left	U-Tn	Total	Totals
AM Peak Hour	7:00 AM	0	222	0	0	222	0	0	0	0	0	0	59	8	0	67	8	0	0	0	8	297
	7:15 AM	5	204	0	0	209	0	0	0	0	0	0	91	5	0	96	7	0	1	0	8	313
	7:30 AM	12	191	0	0	203	0	0	0	0	0	0	74	24	0	98	19	0	0	0	19	320
	7:45 AM	10	214	0	0	224	0	0	0	0	0	0	125	27	0	152	30	0	2	0	32	408
	Peak Hour Volume	27	831	0	0	858	0	0	0	0	0	0	349	64	0	413	64	0	3	0	67	1338
	Rounded Hourly Volume	25	830	0	0	855	0	0	0	0	0	0	350	65	0	415	65	0	5	0	70	1340
	% Single Unit Trucks	3.7	1.4	0.0	0.0	1.5	0.0	0.0	0.0	0.0	0.0	0.0	2.9	4.7	0.0	3.1	1.6	0.0	0.0	0.0	1.5	2.0
	% Heavy Trucks	0.0	0.0	0.0	0.0	0.0	0.0	0.0	0.0	0.0	0.0	0.0	1.1	0.0	0.0	1.0	0.0	0.0	0.0	0.0	0.0	0.3
	% Trucks (Total)	3.7	1.4	0.0	0.0	1.5	0.0	0.0	0.0	0.0	0.0	0.0	4.0	4.7	0.0	4.1	1.6	0.0	0.0	0.0	1.5	2.3
	Peak Hour Factor (PHF)	0.56	0.94	0.00	0.00	0.96	0.00	0.00	0.00	0.00	0.00	0.00	0.70	0.59	0.00	0.68	0.53	0.00	0.37	0.00	0.52	0.82

N/A		From North					From East					From South					From West					
	MD Peak Hour	Main St					0					Main St					Division St					
	Start Time	Right	Thru	Left	U-Tn	Total	Right	Thru	Left	U-Tn	Total	Right	Thru	Left	U-Tn	Total	Right	Thru	Left	U-Tn	Total	Totals
Midday (MD) Peak Hour	12:00 PM	0	0	0	0	0	0	0	0	0	0	0	0	0	0	0	0	0	0	0	0	0
	12:15 PM	0	0	0	0	0	0	0	0	0	0	0	0	0	0	0	0	0	0	0	0	0
	12:30 PM	0	0	0	0	0	0	0	0	0	0	0	0	0	0	0	0	0	0	0	0	0
	12:45 PM	0	0	0	0	0	0	0	0	0	0	0	0	0	0	0	0	0	0	0	0	0
	Peak Hour Volume	0	0	0	0	0	0	0	0	0	0	0	0	0	0	0	0	0	0	0	0	0
	Rounded Hourly Volume	0	0	0	0	0	0	0	0	0	0	0	0	0	0	0	0	0	0	0	0	0
	% Single Unit Trucks	0.0	0.0	0.0	0.0	0.0	0.0	0.0	0.0	0.0	0.0	0.0	0.0	0.0	0.0	0.0	0.0	0.0	0.0	0.0	0.0	0.0
	% Heavy Trucks	0.0	0.0	0.0	0.0	0.0	0.0	0.0	0.0	0.0	0.0	0.0	0.0	0.0	0.0	0.0	0.0	0.0	0.0	0.0	0.0	0.0
	% Trucks (Total)	0.0	0.0	0.0	0.0	0.0	0.0	0.0	0.0	0.0	0.0	0.0	0.0	0.0	0.0	0.0	0.0	0.0	0.0	0.0	0.0	0.0
	Peak Hour Factor (PHF)	0.00	0.00	0.00	0.00	0.00	0.00	0.00	0.00	0.00	0.00	0.00	0.00	0.00	0.00	0.00	0.00	0.00	0.00	0.00	0.00	0.00

Wednesday, April 02, 2014		From North					From East					From South					From West					
	PM Peak Hour	Main St					0					Main St					Division St					
	Start Time	Right	Thru	Left	U-Tn	Total	Right	Thru	Left	U-Tn	Total	Right	Thru	Left	U-Tn	Total	Right	Thru	Left	U-Tn	Total	Totals
PM Peak Hour	4:30 PM	2	144	0	0	146	0	0	0	0	0	0	234	2	0	236	4	0	1	0	5	387
	4:45 PM	4	143	0	0	147	0	0	0	0	0	0	250	7	0	257	9	0	1	0	10	414
	5:00 PM	1	148	0	0	149	0	0	0	0	0	0	240	10	0	250	13	0	2	0	15	414
	5:15 PM	5	100	0	0	105	0	0	0	0	0	0	258	10	0	268	8	0	1	0	9	382
	Peak Hour Volume	12	535	0	0	547	0	0	0	0	0	0	982	29	0	1011	34	0	5	0	39	1597
	Rounded Hourly Volume	10	535	0	0	545	0	0	0	0	0	0	980	30	0	1010	35	0	5	0	40	1595
	% Single Unit Trucks	8.3	1.7	0.0	0.0	1.8	0.0	0.0	0.0	0.0	0.0	0.0	0.6	0.0	0.0	0.6	0.0	0.0	0.0	0.0	0.0	1.0
	% Heavy Trucks	0.0	0.2	0.0	0.0	0.2	0.0	0.0	0.0	0.0	0.0	0.0	0.2	0.0	0.0	0.2	0.0	0.0	0.0	0.0	0.0	0.2
	% Trucks (Total)	8.3	1.9	0.0	0.0	2.0	0.0	0.0	0.0	0.0	0.0	0.0	0.8	0.0	0.0	0.8	0.0	0.0	0.0	0.0	0.0	1.2
	Peak Hour Factor (PHF)	0.60	0.90	0.00	0.00	0.92	0.00	0.00	0.00	0.00	0.00	0.00	0.95	0.72	0.00	0.94	0.65	0.00	0.62	0.00	0.65	0.96

Peak Hour Pedestrian and Bicyclist Volumes

Pedestrians and Bicyclists		Crossing North Approach			Crossing East Approach			Crossing South Approach			Crossing West Approach			Total Ped & Bike Volume
		Main St			0			Main St			Division St			
	15-Minute Start Time	Pedestrian	Bicyclist	Total	Pedestrian	Bicyclist	Total	Pedestrian	Bicyclist	Total	Pedestrian	Bicyclist	Total	
AM	7:00 AM	0	0	0	0	0	0	0	0	0	0	0	0	0
	7:15 AM	0	0	0	0	0	0	0	0	0	0	0	0	0
	7:30 AM	0	0	0	1	0	1	0	0	0	1	0	1	2
	7:45 AM	0	0	0	1	0	1	0	0	0	0	0	0	1
	Total	0	0	0	2	0	2	0	0	0	1	0	1	3
MD	12:00 PM	0	0	0	0	0	0	0	0	0	0	0	0	0
	12:15 PM	0	0	0	0	0	0	0	0	0	0	0	0	0
	12:30 PM	0	0	0	0	0	0	0	0	0	0	0	0	0
	12:45 PM	0	0	0	0	0	0	0	0	0	0	0	0	0
	Total	0	0	0	0	0	0	0	0	0	0	0	0	0
PM	4:30 PM	0	0	0	0	0	0	0	0	0	0	0	0	0
	4:45 PM	0	0	0	0	1	1	0	0	0	0	0	0	1
	5:00 PM	0	2	2	0	1	1	0	0	0	0	0	0	3
	5:15 PM	0	0	0	1	1	2	0	2	2	1	2	3	7
	Total	0	2	2	1	3	4	0	2	2	1	2	3	11

Intersection Traffic Volume Report

Count Basics			*Page 5 of 11*
Start Date:	Wednesday, April 02, 2014	Weekday	Schools in Session
Total Number of Hours Counted: 5		Non-Holiday	No Special Events

15-Minute Motor Vehicle Data

All Motor Vehicles

Main St and

15-Minute Motor Vehicle Data

15-Minute Time Period Start Time		From North (Main St) Right	Thru	Left	U-Tn	Total	From East (0) Right	Thru	Left	U-Tn	Total	From South (Main St) Right	Thru	Left	U-Tn	Total	From West (Division St) Right	Thru	Left	U-Tn	Total	15-Min Totals	Hourly Sum	PHF
AM Peak Period	6:00 AM	0	0	0	0	0	0	0	0	0	0	0	0	0	0	0	0	0	0	0	0	0		
	6:15 AM	0	0	0	0	0	0	0	0	0	0	0	0	0	0	0	0	0	0	0	0	0		
	6:30 AM	1	105	0	0	106	0	0	0	0	0	0	39	1	0	40	2	0	2	0	4	150	1024	0.82
	6:45 AM	2	205	0	0	207	0	0	0	0	0	0	48	1	0	49	8	0	0	0	8	264	1194	0.93
	7:00 AM	0	222	0	0	222	0	0	0	0	0	0	59	8	0	67	8	0	0	0	8	297	1338	0.82
	7:15 AM	5	204	0	0	209	0	0	0	0	0	0	91	5	0	96	7	0	1	0	8	313	1281	0.78
	7:30 AM	12	191	0	0	203	0	0	0	0	0	0	74	24	0	98	19	0	0	0	19	320	1224	0.75
	7:45 AM	10	214	0	0	224	0	0	0	0	0	0	125	27	0	152	30	0	2	0	32	408		
	8:00 AM	1	135	0	0	136	0	0	0	0	0	0	86	5	0	91	12	0	1	0	13	240		
	8:15 AM	1	147	0	0	148	0	0	0	0	0	0	89	11	0	100	5	0	3	0	8	256		
	8:30 AM	0	0	0	0	0	0	0	0	0	0	0	0	0	0	0	0	0	0	0	0	0		
	8:45 AM	0	0	0	0	0	0	0	0	0	0	0	0	0	0	0	0	0	0	0	0	0		
	9:00 AM	0	0	0	0	0	0	0	0	0	0	0	0	0	0	0	0	0	0	0	0	0		
	9:15 AM	0	0	0	0	0	0	0	0	0	0	0	0	0	0	0	0	0	0	0	0	0		
	9:30 AM	0	0	0	0	0	0	0	0	0	0	0	0	0	0	0	0	0	0	0	0	0		
	9:45 AM	0	0	0	0	0	0	0	0	0	0	0	0	0	0	0	0	0	0	0	0	0		
Midday Peak Period	10:00 AM	0	0	0	0	0	0	0	0	0	0	0	0	0	0	0	0	0	0	0	0	0		
	10:15 AM	0	0	0	0	0	0	0	0	0	0	0	0	0	0	0	0	0	0	0	0	0		
	10:30 AM	0	0	0	0	0	0	0	0	0	0	0	0	0	0	0	0	0	0	0	0	0		
	10:45 AM	0	0	0	0	0	0	0	0	0	0	0	0	0	0	0	0	0	0	0	0	0		
	11:00 AM	0	0	0	0	0	0	0	0	0	0	0	0	0	0	0	0	0	0	0	0	0		
	11:15 AM	0	0	0	0	0	0	0	0	0	0	0	0	0	0	0	0	0	0	0	0	0		
	11:30 AM	0	0	0	0	0	0	0	0	0	0	0	0	0	0	0	0	0	0	0	0	0		
	11:45 AM	0	0	0	0	0	0	0	0	0	0	0	0	0	0	0	0	0	0	0	0	0		
	12:00 PM	0	0	0	0	0	0	0	0	0	0	0	0	0	0	0	0	0	0	0	0	0		
	12:15 PM	0	0	0	0	0	0	0	0	0	0	0	0	0	0	0	0	0	0	0	0	0		
	12:30 PM	0	0	0	0	0	0	0	0	0	0	0	0	0	0	0	0	0	0	0	0	0		
	12:45 PM	0	0	0	0	0	0	0	0	0	0	0	0	0	0	0	0	0	0	0	0	0		
	1:00 PM	0	0	0	0	0	0	0	0	0	0	0	0	0	0	0	0	0	0	0	0	0		
	1:15 PM	0	0	0	0	0	0	0	0	0	0	0	0	0	0	0	0	0	0	0	0	0		
	1:30 PM	0	0	0	0	0	0	0	0	0	0	0	0	0	0	0	0	0	0	0	0	0		
	1:45 PM	0	0	0	0	0	0	0	0	0	0	0	0	0	0	0	0	0	0	0	0	0		
PM Peak Period	2:00 PM	0	0	0	0	0	0	0	0	0	0	0	0	0	0	0	0	0	0	0	0	0		
	2:15 PM	0	0	0	0	0	0	0	0	0	0	0	0	0	0	0	0	0	0	0	0	0		
	2:30 PM	3	117	0	0	120	0	0	0	0	0	0	177	10	0	187	4	0	0	0	4	311	1346	0.86
	2:45 PM	10	114	0	0	124	0	0	0	0	0	0	206	31	0	237	5	0	0	0	5	366	1358	0.87
	3:00 PM	22	151	0	0	173	0	0	0	0	0	0	161	21	0	182	33	0	2	0	35	390	1315	0.84
	3:15 PM	9	111	0	0	120	0	0	0	0	0	0	143	7	0	150	6	0	3	0	9	279	1280	0.90
	3:30 PM	3	126	0	0	129	0	0	0	0	0	0	186	2	0	188	5	0	1	0	6	323	1336	0.94
	3:45 PM	3	136	0	0	139	0	0	0	0	0	0	176	5	0	181	3	0	0	0	3	323	1400	0.90
	4:00 PM	1	119	0	0	120	0	0	0	0	0	0	196	6	0	202	26	0	7	0	33	355	1491	0.90
	4:15 PM	3	113	0	0	116	0	0	0	0	0	0	207	5	0	212	5	0	2	0	7	335	1550	0.94
	4:30 PM	2	144	0	0	146	0	0	0	0	0	0	234	2	0	236	4	0	1	0	5	387	1597	0.96
	4:45 PM	4	143	0	0	147	0	0	0	0	0	0	250	7	0	257	9	0	1	0	10	414		
	5:00 PM	1	148	0	0	149	0	0	0	0	0	0	240	10	0	250	13	0	2	0	15	414		
	5:15 PM	5	100	0	0	105	0	0	0	0	0	0	258	10	0	268	8	0	1	0	9	382		
	5:30 PM	0	0	0	0	0	0	0	0	0	0	0	0	0	0	0	0	0	0	0	0	0		
	5:45 PM	0	0	0	0	0	0	0	0	0	0	0	0	0	0	0	0	0	0	0	0	0		
	6:00 PM	0	0	0	0	0	0	0	0	0	0	0	0	0	0	0	0	0	0	0	0	0		
	6:15 PM	0	0	0	0	0	0	0	0	0	0	0	0	0	0	0	0	0	0	0	0	0		
	6:30 PM	0	0	0	0	0	0	0	0	0	0	0	0	0	0	0	0	0	0	0	0	0		
	6:45 PM	0	0	0	0	0	0	0	0	0	0	0	0	0	0	0	0	0	0	0	0	0		
	7:00 PM	0	0	0	0	0	0	0	0	0	0	0	0	0	0	0	0	0	0	0	0	0		
	7:15 PM	0	0	0	0	0	0	0	0	0	0	0	0	0	0	0	0	0	0	0	0	0		
	7:30 PM	0	0	0	0	0	0	0	0	0	0	0	0	0	0	0	0	0	0	0	0	0		
	7:45 PM	0	0	0	0	0	0	0	0	0	0	0	0	0	0	0	0	0	0	0	0	0		
	8:00 PM	0	0	0	0	0	0	0	0	0	0	0	0	0	0	0	0	0	0	0	0	0		
	8:15 PM	0	0	0	0	0	0	0	0	0	0	0	0	0	0	0	0	0	0	0	0	0		
	8:30 PM	0	0	0	0	0	0	0	0	0	0	0	0	0	0	0	0	0	0	0	0	0		
	8:45 PM	0	0	0	0	0	0	0	0	0	0	0	0	0	0	0	0	0	0	0	0	0		
	9:00 PM	0	0	0	0	0	0	0	0	0	0	0	0	0	0	0	0	0	0	0	0	0		
	9:15 PM	0	0	0	0	0	0	0	0	0	0	0	0	0	0	0	0	0	0	0	0	0		
	9:30 PM	0	0	0	0	0	0	0	0	0	0	0	0	0	0	0	0	0	0	0	0	0		
	9:45 PM	0	0	0	0	0	0	0	0	0	0	0	0	0	0	0	0	0	0	0	0	0		
Totals		98	2945	0	0	3043	0	0	0	0	0	0	3045	198	0	3243	212	0	29	0	241	6527		

Peak Hour All Vehicle Volume Summary

Hourly Time Period Start Time		From North (Main St) Right	Thru	Left	U-Tn	Total	From East (0) Right	Thru	Left	U-Tn	Total	From South (Main St) Right	Thru	Left	U-Tn	Total	From West (Division St) Right	Thru	Left	U-Tn	Total	Total Hourly Volume	PHF
AM	7:00 AM	27	831	0	0	858	0	0	0	0	0	0	349	64	0	413	64	0	3	0	67	1338	0.82
MD	12:00 PM	0	0	0	0	0	0	0	0	0	0	0	0	0	0	0	0	0	0	0	0	0	
PM	4:30 PM	12	535	0	0	547	0	0	0	0	0	0	982	29	0	1011	34	0	5	0	39	1597	0.96

Intersection Traffic Volume Report

Count Basics			*Page 9 of 11*
Start Date:	Wednesday, April 02, 2014	Weekday	Schools in Session
Total Number of Hours Counted: 5		Non-Holiday	No Special Events

15-Minute Heavy Vehicle Data

Heavy Vehicles (Single-Unit Trucks, Buses & Semi-Trucks)

Main St and

15-Minute Heavy Vehicle Data

15-Minute Time Period Start Time		From North (Main St) Right	Thru	Left	U-Tn	Total	From East (0) Right	Thru	Left	U-Tn	Total	From South (Main St) Right	Thru	Left	U-Tn	Total	From West (Division St) Right	Thru	Left	U-Tn	Total	15-Min Totals	Hourly Sum
AM Peak Period	6:00 AM	0	0	0	0	0	0	0	0	0	0	0	0	0	0	0	0	0	0	0	0	0	
	6:15 AM	0	0	0	0	0	0	0	0	0	0	0	0	0	0	0	0	0	0	0	0	0	
	6:30 AM	0	0	0	0	0	0	0	0	0	0	0	3	0	0	3	0	0	0	0	0	3	25
	6:45 AM	0	2	0	0	2	0	0	0	0	0	0	6	0	0	6	1	0	0	0	1	9	31
	7:00 AM	0	3	0	0	3	0	0	0	0	0	0	3	0	0	3	0	0	0	0	0	6	31
	7:15 AM	0	3	0	0	3	0	0	0	0	0	0	4	0	0	4	0	0	0	0	0	7	35
	7:30 AM	1	0	0	0	1	0	0	0	0	0	0	5	2	0	7	1	0	0	0	1	9	39
	7:45 AM	0	6	0	0	6	0	0	0	0	0	0	2	1	0	3	0	0	0	0	0	9	
	8:00 AM	0	1	0	0	1	0	0	0	0	0	0	9	0	0	9	0	0	0	0	0	10	
	8:15 AM	0	6	0	0	6	0	0	0	0	0	0	4	0	0	4	1	0	0	0	1	11	
	8:30 AM	0	0	0	0	0	0	0	0	0	0	0	0	0	0	0	0	0	0	0	0	0	
	8:45 AM	0	0	0	0	0	0	0	0	0	0	0	0	0	0	0	0	0	0	0	0	0	
	9:00 AM	0	0	0	0	0	0	0	0	0	0	0	0	0	0	0	0	0	0	0	0	0	
	9:15 AM	0	0	0	0	0	0	0	0	0	0	0	0	0	0	0	0	0	0	0	0	0	
	9:30 AM	0	0	0	0	0	0	0	0	0	0	0	0	0	0	0	0	0	0	0	0	0	
	9:45 AM	0	0	0	0	0	0	0	0	0	0	0	0	0	0	0	0	0	0	0	0	0	
Midday Peak Period	10:00 AM	0	0	0	0	0	0	0	0	0	0	0	0	0	0	0	0	0	0	0	0	0	
	10:15 AM	0	0	0	0	0	0	0	0	0	0	0	0	0	0	0	0	0	0	0	0	0	
	10:30 AM	0	0	0	0	0	0	0	0	0	0	0	0	0	0	0	0	0	0	0	0	0	
	10:45 AM	0	0	0	0	0	0	0	0	0	0	0	0	0	0	0	0	0	0	0	0	0	
	11:00 AM	0	0	0	0	0	0	0	0	0	0	0	0	0	0	0	0	0	0	0	0	0	
	11:15 AM	0	0	0	0	0	0	0	0	0	0	0	0	0	0	0	0	0	0	0	0	0	
	11:30 AM	0	0	0	0	0	0	0	0	0	0	0	0	0	0	0	0	0	0	0	0	0	
	11:45 AM	0	0	0	0	0	0	0	0	0	0	0	0	0	0	0	0	0	0	0	0	0	
	12:00 PM	0	0	0	0	0	0	0	0	0	0	0	0	0	0	0	0	0	0	0	0	0	
	12:15 PM	0	0	0	0	0	0	0	0	0	0	0	0	0	0	0	0	0	0	0	0	0	
	12:30 PM	0	0	0	0	0	0	0	0	0	0	0	0	0	0	0	0	0	0	0	0	0	
	12:45 PM	0	0	0	0	0	0	0	0	0	0	0	0	0	0	0	0	0	0	0	0	0	
	1:00 PM	0	0	0	0	0	0	0	0	0	0	0	0	0	0	0	0	0	0	0	0	0	
	1:15 PM	0	0	0	0	0	0	0	0	0	0	0	0	0	0	0	0	0	0	0	0	0	
	1:30 PM	0	0	0	0	0	0	0	0	0	0	0	0	0	0	0	0	0	0	0	0	0	
	1:45 PM	0	0	0	0	0	0	0	0	0	0	0	0	0	0	0	0	0	0	0	0	0	
PM Peak Period	2:00 PM	0	0	0	0	0	0	0	0	0	0	0	0	0	0	0	0	0	0	0	0	0	
	2:15 PM	0	0	0	0	0	0	0	0	0	0	0	0	0	0	0	0	0	0	0	0	0	
	2:30 PM	1	2	0	0	3	0	0	0	0	0	0	3	0	0	3	0	0	0	0	0	6	33
	2:45 PM	0	1	0	0	1	0	0	0	0	0	0	8	1	0	9	0	0	0	0	0	10	33
	3:00 PM	1	7	0	0	8	0	0	0	0	0	0	1	0	0	1	1	0	0	0	1	10	26
	3:15 PM	0	4	0	0	4	0	0	0	0	0	0	3	0	0	3	0	0	0	0	0	7	20
	3:30 PM	0	1	0	0	1	0	0	0	0	0	0	4	0	0	4	1	0	0	0	1	6	17
	3:45 PM	0	2	0	0	2	0	0	0	0	0	0	1	0	0	1	0	0	0	0	0	3	22
	4:00 PM	0	2	0	0	2	0	0	0	0	0	0	1	0	0	1	1	0	0	0	1	4	23
	4:15 PM	1	2	0	0	3	0	0	0	0	0	0	1	0	0	1	0	0	0	0	0	4	22
	4:30 PM	1	7	0	0	8	0	0	0	0	0	0	3	0	0	3	0	0	0	0	0	11	19
	4:45 PM	0	3	0	0	3	0	0	0	0	0	0	1	0	0	1	0	0	0	0	0	4	
	5:00 PM	0	0	0	0	0	0	0	0	0	0	0	3	0	0	3	0	0	0	0	0	3	
	5:15 PM	0	0	0	0	0	0	0	0	0	0	0	1	0	0	1	0	0	0	0	0	1	
	5:30 PM	0	0	0	0	0	0	0	0	0	0	0	0	0	0	0	0	0	0	0	0	0	
	5:45 PM	0	0	0	0	0	0	0	0	0	0	0	0	0	0	0	0	0	0	0	0	0	
	6:00 PM	0	0	0	0	0	0	0	0	0	0	0	0	0	0	0	0	0	0	0	0	0	
	6:15 PM	0	0	0	0	0	0	0	0	0	0	0	0	0	0	0	0	0	0	0	0	0	
	6:30 PM	0	0	0	0	0	0	0	0	0	0	0	0	0	0	0	0	0	0	0	0	0	
	6:45 PM	0	0	0	0	0	0	0	0	0	0	0	0	0	0	0	0	0	0	0	0	0	
	7:00 PM	0	0	0	0	0	0	0	0	0	0	0	0	0	0	0	0	0	0	0	0	0	
	7:15 PM	0	0	0	0	0	0	0	0	0	0	0	0	0	0	0	0	0	0	0	0	0	
	7:30 PM	0	0	0	0	0	0	0	0	0	0	0	0	0	0	0	0	0	0	0	0	0	
	7:45 PM	0	0	0	0	0	0	0	0	0	0	0	0	0	0	0	0	0	0	0	0	0	
	8:00 PM	0	0	0	0	0	0	0	0	0	0	0	0	0	0	0	0	0	0	0	0	0	
	8:15 PM	0	0	0	0	0	0	0	0	0	0	0	0	0	0	0	0	0	0	0	0	0	
	8:30 PM	0	0	0	0	0	0	0	0	0	0	0	0	0	0	0	0	0	0	0	0	0	
	8:45 PM	0	0	0	0	0	0	0	0	0	0	0	0	0	0	0	0	0	0	0	0	0	
	9:00 PM	0	0	0	0	0	0	0	0	0	0	0	0	0	0	0	0	0	0	0	0	0	
	9:15 PM	0	0	0	0	0	0	0	0	0	0	0	0	0	0	0	0	0	0	0	0	0	
	9:30 PM	0	0	0	0	0	0	0	0	0	0	0	0	0	0	0	0	0	0	0	0	0	
	9:45 PM	0	0	0	0	0	0	0	0	0	0	0	0	0	0	0	0	0	0	0	0	0	
Totals		5	52	0	0	57	0	0	0	0	0	0	66	4	0	70	6	0	0	0	6	133	

Peak Hour Heavy Vehicle Volume Summary

Hourly Time Period Start Time		From North (Main St) Right	Thru	Left	U-Tn	Total	From East (0) Right	Thru	Left	U-Tn	Total	From South (Main St) Right	Thru	Left	U-Tn	Total	From West (Division St) Right	Thru	Left	U-Tn	Total	Total Hourly Volume
AM	7:00 AM	1	12	0	0	13	0	0	0	0	0	0	14	3	0	17	1	0	0	0	1	31
MD	12:00 PM	0	0	0	0	0	0	0	0	0	0	0	0	0	0	0	0	0	0	0	0	0
PM	4:30 PM	1	10	0	0	11	0	0	0	0	0	0	8	0	0	8	0	0	0	0	0	19

Intersection Traffic Volume Report

Count Basics	Version 2013.J4.1		Page 1 of 11
Start Date:	Wednesday, April 02, 2014	Weekday	Schools in Session
Total Number of Hours Counted: 5		Non-Holiday	No Special Events

Base Information, Observed (5) Hour and Estimated (24) Hour Volume Summaries

Intersection of: Main St and Green Bay Rd

Site Information

Municipality	Village of Theinsville		
County	Ozaukee	WisDOT Region	SE
Traffic Control	Traffic Signal		
Roadway Names		North Direction	↑
North Leg	Main St		
East Leg	Green Bay Rd		
South Leg	Main St		
West Leg	Buntrock Ave		
Special Considerations			
Schools	In Session		
Holidays	None		
Special Events	None		
Special Pedestrians Observed			
Pre-school children	None		
Elementry school age children	None		
Visually impaired (white cane/helper dog)	None		
Elderly/disabled (except wheelchairs)	None		
Wheelchairs/electric scooters	None		
Other (describe)	None	None	

Count Information

Hrs Counted:	6:30 AM-8:30 AM and 2:30 PM-5:30 PM				
1st Day of Count	Wednesday, April 02, 2014			Weather	
AM Peak Period	Wednesday, April 02, 2014			Clear & Dry	
Midday Peak Period				Clear & Dry	
PM Peak Period	Wednesday, April 02, 2014			Clear & Dry	
Calculated Peak Hours					
AM	7:00-8:00am	MD		PM	4:30-5:30pm
Peak Hours Selected for Analysis					
AM	7:00-8:00am	MD		PM	4:30-5:30pm
Daily/Seasonal Adjustment Group	(2) Urban Arterials & Collectors				
Count Expansion Group	(2) Urban Arterials & Collectors				
Daily/Seasonal Adjustment Factor	0.953		Count Expansion Factor	2.664	
Company Name	TADI			Manual Adj.	1.000
Observers	AM Peak Period	Jayne H			
	Midday Peak Period				
	PM Peak Period	Jayne H			
Comments	Version 2011.J4.1; Expansion Factor assumed 6:00AM to 8:00AM and 3:00PM to 6:00PM times on 2012 WisDOT Expansion Factor Spreadsheet.				

Observed 5 Hour Volume Summary

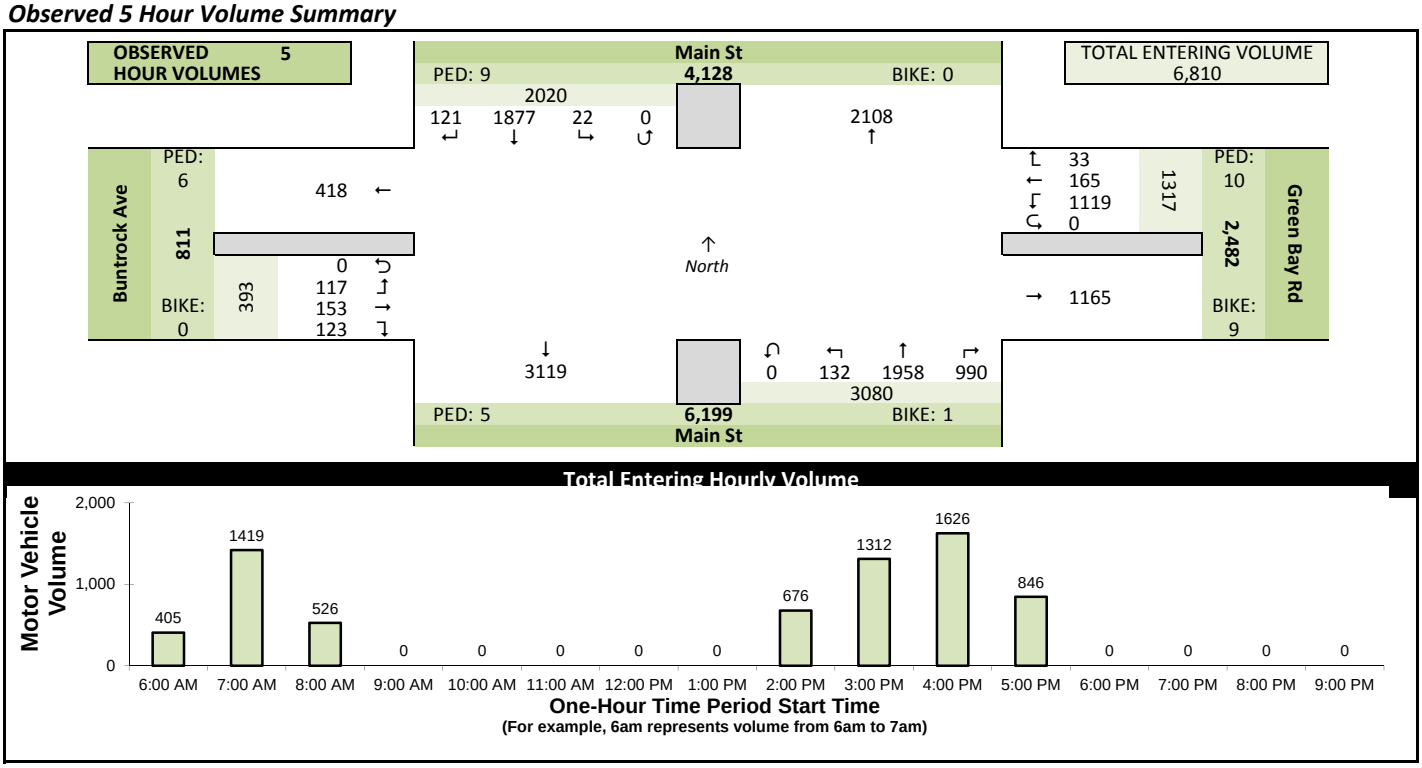

Estimated 24 Hour AADT

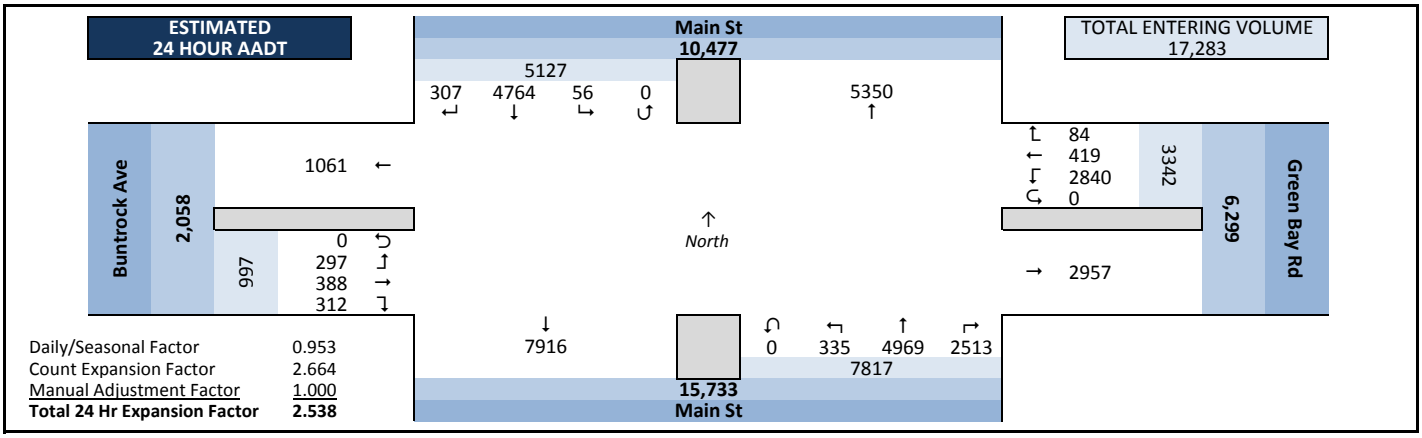

Intersection Traffic Volume Report

Count Basics			Page 2 of 11
Start Date:	Wednesday, April 02, 2014	Weekday	Schools in Session
Total Number of Hours Counted: 5		Non-Holiday	No Special Events

Peak Hour Volume Graphical Summary

All Motor Vehicles

Main St and Green Bay Rd

AM Peak Hour Summary

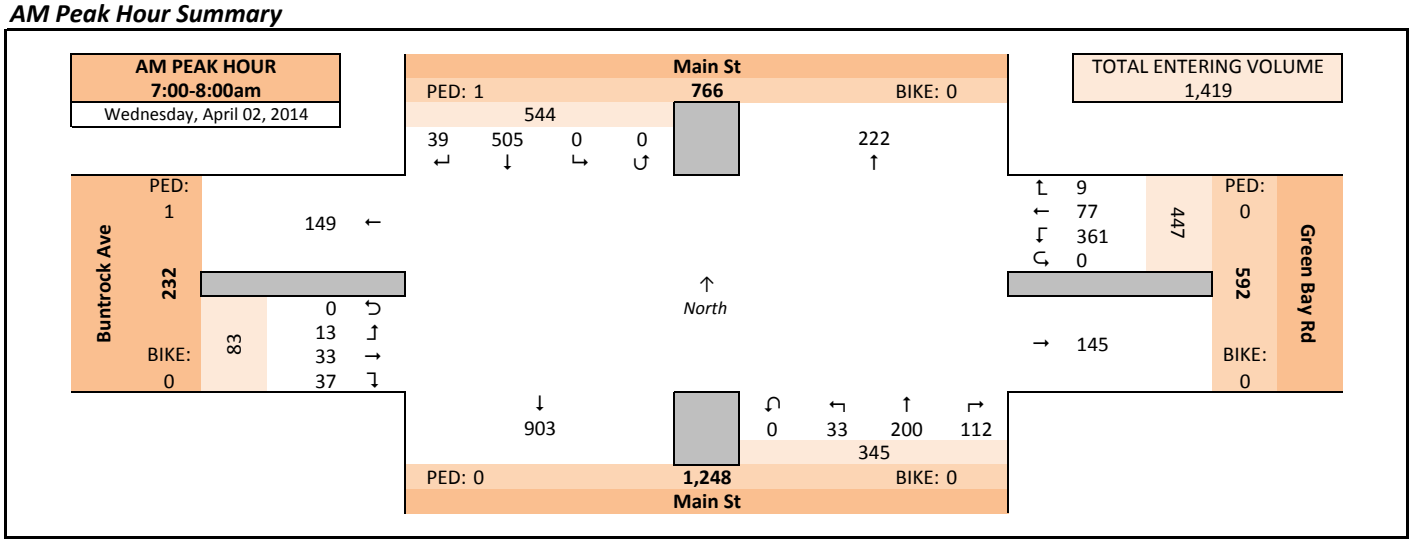

Midday (MD) Peak Hour Summary

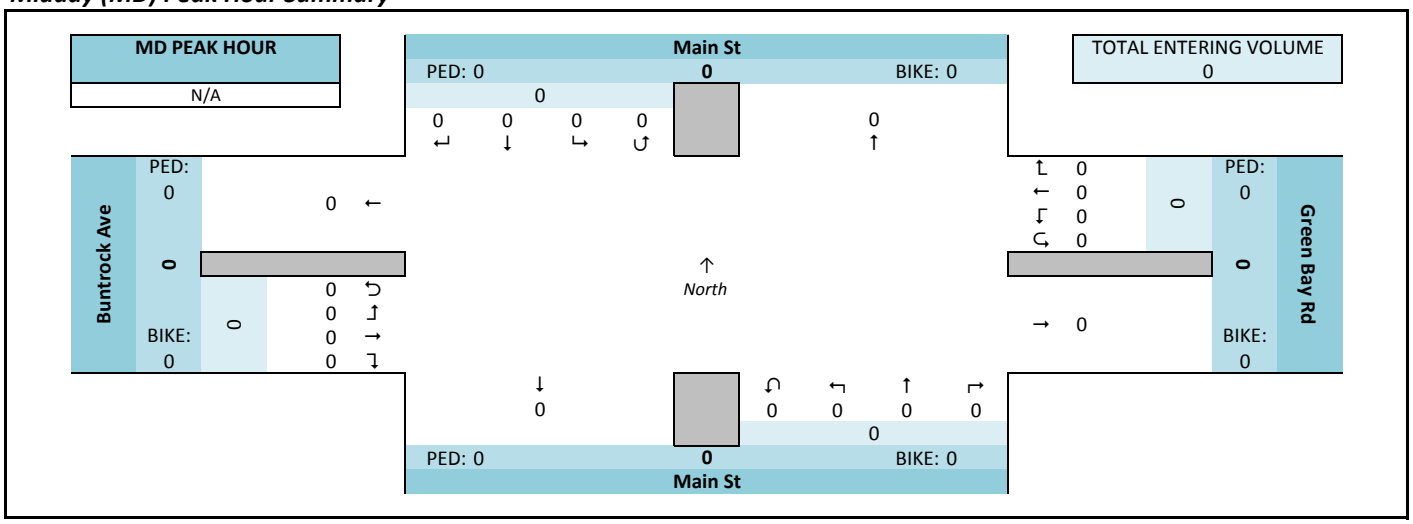

PM Peak Hour Summary

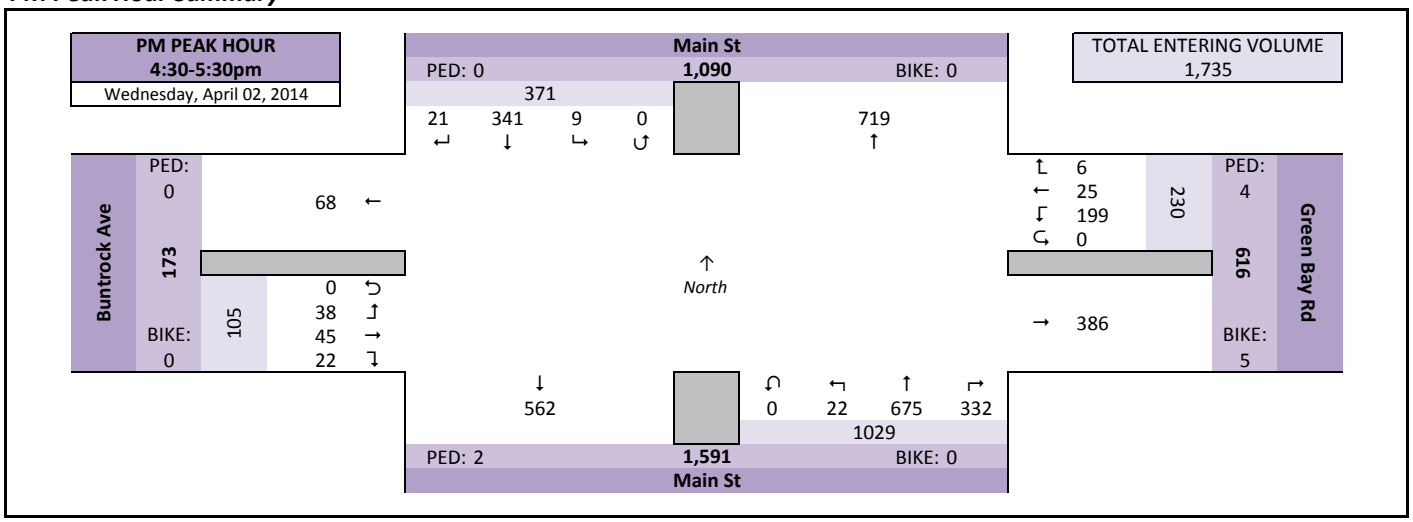

Intersection Traffic Volume Report

Count Basics			Page 3 of 11
Start Date:	Wednesday, April 02, 2014	Weekday	Schools in Session
Total Number of Hours Counted: 5		Non-Holiday	No Special Events

Peak Hour Volume Summary

All Motor Vehicles

Main St and Green Bay Rd

Peak Hour Volumes, Truck Percentages, and PHFs

Wednesday, April 02, 2014		From North					From East					From South					From West					
	AM Peak Hour	Main St					Green Bay Rd					Main St					Buntrock Ave					
	Start Time	Right	Thru	Left	U-Tn	Total	Right	Thru	Left	U-Tn	Total	Right	Thru	Left	U-Tn	Total	Right	Thru	Left	U-Tn	Total	Totals
AM Peak Hour	7:00 AM	4	105	0	0	109	1	7	122	0	130	28	38	1	0	67	5	0	1	0	6	312
	7:15 AM	4	119	0	0	123	5	4	84	0	93	34	51	4	0	89	3	3	5	0	11	316
	7:30 AM	15	127	0	0	142	1	20	84	0	105	21	46	6	0	73	4	3	2	0	9	329
	7:45 AM	16	154	0	0	170	2	46	71	0	119	29	65	22	0	116	25	27	5	0	57	462
	Peak Hour Volume	39	505	0	0	544	9	77	361	0	447	112	200	33	0	345	37	33	13	0	83	1419
	Rounded Hourly Volume	40	505	0	0	545	10	75	360	0	445	110	200	35	0	345	35	35	15	0	85	1420
	% Single Unit Trucks	7.7	1.4	0.0	0.0	1.8	11.1	6.5	1.4	0.0	2.5	5.4	4.0	0.0	0.0	4.1	5.4	3.0	0.0	0.0	3.6	2.7
	% Heavy Trucks	0.0	0.0	0.0	0.0	0.0	11.1	0.0	0.0	0.0	0.2	0.9	1.0	0.0	0.0	0.9	0.0	0.0	0.0	0.0	0.0	0.3
	% Trucks (Total)	7.7	1.4	0.0	0.0	1.8	22.2	6.5	1.4	0.0	2.7	6.2	5.0	0.0	0.0	4.9	5.4	3.0	0.0	0.0	3.6	3.0
	Peak Hour Factor (PHF)	0.61	0.82	0.00	0.00	0.80	0.45	0.42	0.74	0.00	0.86	0.82	0.77	0.37	0.00	0.74	0.37	0.31	0.65	0.00	0.36	0.77

N/A		From North					From East					From South					From West					
	MD Peak Hour	Main St					Green Bay Rd					Main St					Buntrock Ave					
	Start Time	Right	Thru	Left	U-Tn	Total	Right	Thru	Left	U-Tn	Total	Right	Thru	Left	U-Tn	Total	Right	Thru	Left	U-Tn	Total	Totals
Midday (MD) Peak Hour	12:00 PM	0	0	0	0	0	0	0	0	0	0	0	0	0	0	0	0	0	0	0	0	0
	12:15 PM	0	0	0	0	0	0	0	0	0	0	0	0	0	0	0	0	0	0	0	0	0
	12:30 PM	0	0	0	0	0	0	0	0	0	0	0	0	0	0	0	0	0	0	0	0	0
	12:45 PM	0	0	0	0	0	0	0	0	0	0	0	0	0	0	0	0	0	0	0	0	0
	Peak Hour Volume	0	0	0	0	0	0	0	0	0	0	0	0	0	0	0	0	0	0	0	0	0
	Rounded Hourly Volume	0	0	0	0	0	0	0	0	0	0	0	0	0	0	0	0	0	0	0	0	0
	% Single Unit Trucks	0.0	0.0	0.0	0.0	0.0	0.0	0.0	0.0	0.0	0.0	0.0	0.0	0.0	0.0	0.0	0.0	0.0	0.0	0.0	0.0	0.0
	% Heavy Trucks	0.0	0.0	0.0	0.0	0.0	0.0	0.0	0.0	0.0	0.0	0.0	0.0	0.0	0.0	0.0	0.0	0.0	0.0	0.0	0.0	0.0
	% Trucks (Total)	0.0	0.0	0.0	0.0	0.0	0.0	0.0	0.0	0.0	0.0	0.0	0.0	0.0	0.0	0.0	0.0	0.0	0.0	0.0	0.0	0.0
	Peak Hour Factor (PHF)	0.00	0.00	0.00	0.00	0.00	0.00	0.00	0.00	0.00	0.00	0.00	0.00	0.00	0.00	0.00	0.00	0.00	0.00	0.00	0.00	0.00

Wednesday, April 02, 2014		From North					From East					From South					From West					
	PM Peak Hour	Main St					Green Bay Rd					Main St					Buntrock Ave					
	Start Time	Right	Thru	Left	U-Tn	Total	Right	Thru	Left	U-Tn	Total	Right	Thru	Left	U-Tn	Total	Right	Thru	Left	U-Tn	Total	Totals
PM Peak Hour	4:30 PM	4	89	0	0	93	2	9	49	0	60	72	171	4	0	247	6	7	15	0	28	428
	4:45 PM	6	89	8	0	103	0	9	56	0	65	78	173	8	0	259	6	16	12	0	34	461
	5:00 PM	7	103	1	0	111	2	5	46	0	53	91	149	6	0	246	2	15	6	0	23	433
	5:15 PM	4	60	0	0	64	2	2	48	0	52	91	182	4	0	277	8	7	5	0	20	413
	Peak Hour Volume	21	341	9	0	371	6	25	199	0	230	332	675	22	0	1029	22	45	38	0	105	1735
	Rounded Hourly Volume	20	340	10	0	370	5	25	200	0	230	330	675	20	0	1025	20	45	40	0	105	1730
	% Single Unit Trucks	0.0	2.1	0.0	0.0	1.9	0.0	0.0	2.0	0.0	1.7	0.3	0.7	0.0	0.0	0.6	4.5	0.0	0.0	0.0	1.0	1.0
	% Heavy Trucks	0.0	0.3	0.0	0.0	0.3	0.0	0.0	0.0	0.0	0.0	0.0	0.3	0.0	0.0	0.2	0.0	0.0	0.0	0.0	0.0	0.2
	% Trucks (Total)	0.0	2.3	0.0	0.0	2.2	0.0	0.0	2.0	0.0	1.7	0.3	1.0	0.0	0.0	0.8	4.5	0.0	0.0	0.0	1.0	1.2
	Peak Hour Factor (PHF)	0.75	0.83	0.28	0.00	0.84	0.75	0.69	0.89	0.00	0.88	0.91	0.93	0.69	0.00	0.93	0.69	0.70	0.63	0.00	0.77	0.94

Peak Hour Pedestrian and Bicyclist Volumes

Pedestrians and Bicyclists		Crossing North Approach			Crossing East Approach			Crossing South Approach			Crossing West Approach			Total Ped & Bike Volume
		Main St			Green Bay Rd			Main St			Buntrock Ave			
	15-Minute Start Time	Pedestrian	Bicyclist	Total	Pedestrian	Bicyclist	Total	Pedestrian	Bicyclist	Total	Pedestrian	Bicyclist	Total	
AM	7:00 AM	0	0	0	0	0	0	0	0	0	0	0	0	0
	7:15 AM	0	0	0	0	0	0	0	0	0	0	0	0	0
	7:30 AM	1	0	1	0	0	0	0	0	0	1	0	1	2
	7:45 AM	0	0	0	0	0	0	0	0	0	0	0	0	0
	Total	1	0	1	0	0	0	0	0	0	1	0	1	2
MD	12:00 PM	0	0	0	0	0	0	0	0	0	0	0	0	0
	12:15 PM	0	0	0	0	0	0	0	0	0	0	0	0	0
	12:30 PM	0	0	0	0	0	0	0	0	0	0	0	0	0
	12:45 PM	0	0	0	0	0	0	0	0	0	0	0	0	0
	Total	0	0	0	0	0	0	0	0	0	0	0	0	0
PM	4:30 PM	0	0	0	0	1	1	0	0	0	0	0	0	1
	4:45 PM	0	0	0	0	1	1	0	0	0	0	0	0	1
	5:00 PM	0	0	0	1	2	3	0	0	0	0	0	0	3
	5:15 PM	0	0	0	3	1	4	2	0	2	0	0	0	6
	Total	0	0	0	4	5	9	2	0	2	0	0	0	11

Intersection Traffic Volume Report

Count Basics			*Page 5 of 11*
Start Date:	Wednesday, April 02, 2014	Weekday	Schools in Session
Total Number of Hours Counted: 5		Non-Holiday	No Special Events

15-Minute Motor Vehicle Data

All Motor Vehicles

Main St and Green Bay Rd

15-Minute Motor Vehicle Data

	15-Minute Time Period Start Time	From North (Main St) Right	Thru	Left	U-Tn	Total	From East (Green Bay Rd) Right	Thru	Left	U-Tn	Total	From South (Main St) Right	Thru	Left	U-Tn	Total	From West (Buntrock Ave) Right	Thru	Left	U-Tn	Total	15-Min Totals	Hourly Sum	PHF
AM Peak Period	6:00 AM	0	0	0	0	0	0	0	0	0	0	0	0	0	0	0	0	0	0	0	0	0		
	6:15 AM	0	0	0	0	0	0	0	0	0	0	0	0	0	0	0	0	0	0	0	0	0		
	6:30 AM	0	69	0	0	69	0	1	47	0	48	10	24	2	0	36	1	1	0	0	2	155	1033	0.82
	6:45 AM	5	96	1	0	102	0	5	98	0	103	11	27	2	0	40	3	0	2	0	5	250	1207	0.92
	7:00 AM	4	105	0	0	109	1	7	122	0	130	28	38	1	0	67	5	0	1	0	6	312	1419	0.77
	7:15 AM	4	119	0	0	123	5	4	84	0	93	34	51	4	0	89	3	3	5	0	11	316	1357	0.73
	7:30 AM	15	127	0	0	142	1	20	84	0	105	21	46	6	0	73	4	3	2	0	9	329	1317	0.71
	7:45 AM	16	154	0	0	170	2	46	71	0	119	29	65	22	0	116	25	27	5	0	57	462		
	8:00 AM	2	85	0	0	87	0	5	44	0	49	30	50	10	0	90	6	10	8	0	24	250		
	8:15 AM	6	98	0	0	104	2	9	59	0	70	26	63	6	0	95	2	2	3	0	7	276		
	8:30 AM	0	0	0	0	0	0	0	0	0	0	0	0	0	0	0	0	0	0	0	0	0		
	8:45 AM	0	0	0	0	0	0	0	0	0	0	0	0	0	0	0	0	0	0	0	0	0		
	9:00 AM	0	0	0	0	0	0	0	0	0	0	0	0	0	0	0	0	0	0	0	0	0		
	9:15 AM	0	0	0	0	0	0	0	0	0	0	0	0	0	0	0	0	0	0	0	0	0		
	9:30 AM	0	0	0	0	0	0	0	0	0	0	0	0	0	0	0	0	0	0	0	0	0		
	9:45 AM	0	0	0	0	0	0	0	0	0	0	0	0	0	0	0	0	0	0	0	0	0		
Midday Peak Period	10:00 AM	0	0	0	0	0	0	0	0	0	0	0	0	0	0	0	0	0	0	0	0	0		
	10:15 AM	0	0	0	0	0	0	0	0	0	0	0	0	0	0	0	0	0	0	0	0	0		
	10:30 AM	0	0	0	0	0	0	0	0	0	0	0	0	0	0	0	0	0	0	0	0	0		
	10:45 AM	0	0	0	0	0	0	0	0	0	0	0	0	0	0	0	0	0	0	0	0	0		
	11:00 AM	0	0	0	0	0	0	0	0	0	0	0	0	0	0	0	0	0	0	0	0	0		
	11:15 AM	0	0	0	0	0	0	0	0	0	0	0	0	0	0	0	0	0	0	0	0	0		
	11:30 AM	0	0	0	0	0	0	0	0	0	0	0	0	0	0	0	0	0	0	0	0	0		
	11:45 AM	0	0	0	0	0	0	0	0	0	0	0	0	0	0	0	0	0	0	0	0	0		
	12:00 PM	0	0	0	0	0	0	0	0	0	0	0	0	0	0	0	0	0	0	0	0	0		
	12:15 PM	0	0	0	0	0	0	0	0	0	0	0	0	0	0	0	0	0	0	0	0	0		
	12:30 PM	0	0	0	0	0	0	0	0	0	0	0	0	0	0	0	0	0	0	0	0	0		
	12:45 PM	0	0	0	0	0	0	0	0	0	0	0	0	0	0	0	0	0	0	0	0	0		
	1:00 PM	0	0	0	0	0	0	0	0	0	0	0	0	0	0	0	0	0	0	0	0	0		
	1:15 PM	0	0	0	0	0	0	0	0	0	0	0	0	0	0	0	0	0	0	0	0	0		
	1:30 PM	0	0	0	0	0	0	0	0	0	0	0	0	0	0	0	0	0	0	0	0	0		
	1:45 PM	0	0	0	0	0	0	0	0	0	0	0	0	0	0	0	0	0	0	0	0	0		
PM Peak Period	2:00 PM	0	0	0	0	0	0	0	0	0	0	0	0	0	0	0	0	0	0	0	0	0		
	2:15 PM	0	0	0	0	0	0	0	0	0	0	0	0	0	0	0	0	0	0	0	0	0		
	2:30 PM	4	84	4	0	92	2	3	45	0	50	53	103	8	0	164	3	5	4	0	12	318	1310	0.91
	2:45 PM	6	87	0	0	93	1	7	41	0	49	78	110	20	0	208	4	3	1	0	8	358	1313	0.92
	3:00 PM	8	89	2	0	99	1	9	41	0	51	48	94	2	0	144	23	12	7	0	42	336	1312	0.92
	3:15 PM	5	82	2	0	89	3	5	35	0	43	48	92	8	0	148	4	9	5	0	18	298	1331	0.93
	3:30 PM	5	86	0	0	91	1	2	31	0	34	56	112	4	0	172	2	10	12	0	24	321	1415	0.93
	3:45 PM	6	93	0	0	99	2	8	46	0	56	53	129	6	0	188	6	2	6	0	14	357	1522	0.89
	4:00 PM	6	82	2	0	90	3	5	34	0	42	56	140	2	0	198	6	10	9	0	25	355	1626	0.88
	4:15 PM	8	80	2	0	90	3	4	38	0	45	77	139	7	0	223	4	11	9	0	24	382	1704	0.92
	4:30 PM	4	89	0	0	93	2	9	49	0	60	72	171	4	0	247	6	7	15	0	28	428	1735	0.94
	4:45 PM	6	89	8	0	103	0	9	56	0	65	78	173	8	0	259	6	16	12	0	34	461		
	5:00 PM	7	103	1	0	111	2	5	46	0	53	91	149	6	0	246	2	15	6	0	23	433		
	5:15 PM	4	60	0	0	64	2	2	48	0	52	91	182	4	0	277	8	7	5	0	20	413		
	5:30 PM	0	0	0	0	0	0	0	0	0	0	0	0	0	0	0	0	0	0	0	0	0		
	5:45 PM	0	0	0	0	0	0	0	0	0	0	0	0	0	0	0	0	0	0	0	0	0		
	6:00 PM	0	0	0	0	0	0	0	0	0	0	0	0	0	0	0	0	0	0	0	0	0		
	6:15 PM	0	0	0	0	0	0	0	0	0	0	0	0	0	0	0	0	0	0	0	0	0		
	6:30 PM	0	0	0	0	0	0	0	0	0	0	0	0	0	0	0	0	0	0	0	0	0		
	6:45 PM	0	0	0	0	0	0	0	0	0	0	0	0	0	0	0	0	0	0	0	0	0		
	7:00 PM	0	0	0	0	0	0	0	0	0	0	0	0	0	0	0	0	0	0	0	0	0		
	7:15 PM	0	0	0	0	0	0	0	0	0	0	0	0	0	0	0	0	0	0	0	0	0		
	7:30 PM	0	0	0	0	0	0	0	0	0	0	0	0	0	0	0	0	0	0	0	0	0		
	7:45 PM	0	0	0	0	0	0	0	0	0	0	0	0	0	0	0	0	0	0	0	0	0		
	8:00 PM	0	0	0	0	0	0	0	0	0	0	0	0	0	0	0	0	0	0	0	0	0		
	8:15 PM	0	0	0	0	0	0	0	0	0	0	0	0	0	0	0	0	0	0	0	0	0		
	8:30 PM	0	0	0	0	0	0	0	0	0	0	0	0	0	0	0	0	0	0	0	0	0		
	8:45 PM	0	0	0	0	0	0	0	0	0	0	0	0	0	0	0	0	0	0	0	0	0		
	9:00 PM	0	0	0	0	0	0	0	0	0	0	0	0	0	0	0	0	0	0	0	0	0		
	9:15 PM	0	0	0	0	0	0	0	0	0	0	0	0	0	0	0	0	0	0	0	0	0		
	9:30 PM	0	0	0	0	0	0	0	0	0	0	0	0	0	0	0	0	0	0	0	0	0		
	9:45 PM	0	0	0	0	0	0	0	0	0	0	0	0	0	0	0	0	0	0	0	0	0		
Totals		121	1877	22	0	2020	33	165	1119	0	1317	990	1958	132	0	3080	123	153	117	0	393	6810		

Peak Hour All Vehicle Volume Summary

Hourly Time Period	Start Time	From North (Main St) Right	Thru	Left	U-Tn	Total	From East (Green Bay Rd) Right	Thru	Left	U-Tn	Total	From South (Main St) Right	Thru	Left	U-Tn	Total	From West (Buntrock Ave) Right	Thru	Left	U-Tn	Total	Total Hourly Volume	PHF
AM	7:00 AM	39	505	0	0	544	9	77	361	0	447	112	200	33	0	345	37	33	13	0	83	1419	0.77
MD	12:00 PM	0	0	0	0	0	0	0	0	0	0	0	0	0	0	0	0	0	0	0	0	0	
PM	4:30 PM	21	341	9	0	371	6	25	199	0	230	332	675	22	0	1029	22	45	38	0	105	1735	0.94

Intersection Traffic Volume Report

Count Basics			*Page 9 of 11*
Start Date:	Wednesday, April 02, 2014	Weekday	Schools in Session
Total Number of Hours Counted: 5		Non-Holiday	No Special Events

15-Minute Heavy Vehicle Data

Heavy Vehicles (Single-Unit Trucks, Buses & Semi-Trucks)

Main St and Green Bay Rd

15-Minute Heavy Vehicle Data

	15-Minute Time Period Start Time	From North (Main St) Right	Thru	Left	U-Tn	Total	From East (Green Bay Rd) Right	Thru	Left	U-Tn	Total	From South (Main St) Right	Thru	Left	U-Tn	Total	From West (Buntrock Ave) Right	Thru	Left	U-Tn	Total	15-Min Totals	Hourly Sum
AM Peak Period	6:00 AM	0	0	0	0	0	0	0	0	0	0	0	0	0	0	0	0	0	0	0	0	0	
	6:15 AM	0	0	0	0	0	0	0	0	0	0	0	0	0	0	0	0	0	0	0	0	0	
	6:30 AM	0	0	0	0	0	0	0	0	0	0	2	2	0	0	4	0	0	0	0	0	4	25
	6:45 AM	0	2	1	0	3	0	0	0	0	0	0	2	0	0	2	0	0	0	0	0	5	37
	7:00 AM	0	1	0	0	1	0	0	3	0	3	3	4	0	0	7	0	0	0	0	0	11	42
	7:15 AM	0	1	0	0	1	0	0	1	0	1	1	2	0	0	3	0	0	0	0	0	5	40
	7:30 AM	3	2	0	0	5	0	5	1	0	6	2	3	0	0	5	0	0	0	0	0	16	45
	7:45 AM	0	3	0	0	3	2	0	0	0	2	1	1	0	0	2	2	1	0	0	3	10	
	8:00 AM	0	0	0	0	0	0	0	1	0	1	2	6	0	0	8	0	0	0	0	0	9	
	8:15 AM	0	4	0	0	4	1	0	1	0	2	1	3	0	0	4	0	0	0	0	0	10	
	8:30 AM	0	0	0	0	0	0	0	0	0	0	0	0	0	0	0	0	0	0	0	0	0	
	8:45 AM	0	0	0	0	0	0	0	0	0	0	0	0	0	0	0	0	0	0	0	0	0	
	9:00 AM	0	0	0	0	0	0	0	0	0	0	0	0	0	0	0	0	0	0	0	0	0	
	9:15 AM	0	0	0	0	0	0	0	0	0	0	0	0	0	0	0	0	0	0	0	0	0	
	9:30 AM	0	0	0	0	0	0	0	0	0	0	0	0	0	0	0	0	0	0	0	0	0	
	9:45 AM	0	0	0	0	0	0	0	0	0	0	0	0	0	0	0	0	0	0	0	0	0	
Midday Peak Period	10:00 AM	0	0	0	0	0	0	0	0	0	0	0	0	0	0	0	0	0	0	0	0	0	
	10:15 AM	0	0	0	0	0	0	0	0	0	0	0	0	0	0	0	0	0	0	0	0	0	
	10:30 AM	0	0	0	0	0	0	0	0	0	0	0	0	0	0	0	0	0	0	0	0	0	
	10:45 AM	0	0	0	0	0	0	0	0	0	0	0	0	0	0	0	0	0	0	0	0	0	
	11:00 AM	0	0	0	0	0	0	0	0	0	0	0	0	0	0	0	0	0	0	0	0	0	
	11:15 AM	0	0	0	0	0	0	0	0	0	0	0	0	0	0	0	0	0	0	0	0	0	
	11:30 AM	0	0	0	0	0	0	0	0	0	0	0	0	0	0	0	0	0	0	0	0	0	
	11:45 AM	0	0	0	0	0	0	0	0	0	0	0	0	0	0	0	0	0	0	0	0	0	
	12:00 PM	0	0	0	0	0	0	0	0	0	0	0	0	0	0	0	0	0	0	0	0	0	
	12:15 PM	0	0	0	0	0	0	0	0	0	0	0	0	0	0	0	0	0	0	0	0	0	
	12:30 PM	0	0	0	0	0	0	0	0	0	0	0	0	0	0	0	0	0	0	0	0	0	
	12:45 PM	0	0	0	0	0	0	0	0	0	0	0	0	0	0	0	0	0	0	0	0	0	
	1:00 PM	0	0	0	0	0	0	0	0	0	0	0	0	0	0	0	0	0	0	0	0	0	
	1:15 PM	0	0	0	0	0	0	0	0	0	0	0	0	0	0	0	0	0	0	0	0	0	
	1:30 PM	0	0	0	0	0	0	0	0	0	0	0	0	0	0	0	0	0	0	0	0	0	
	1:45 PM	0	0	0	0	0	0	0	0	0	0	0	0	0	0	0	0	0	0	0	0	0	
PM Peak Period	2:00 PM	0	0	0	0	0	0	0	0	0	0	0	0	0	0	0	0	0	0	0	0	0	
	2:15 PM	0	0	0	0	0	0	0	0	0	0	0	0	0	0	0	0	0	0	0	0	0	
	2:30 PM	0	1	0	0	1	0	0	1	0	1	0	2	0	0	2	0	0	0	0	0	4	34
	2:45 PM	0	1	0	0	1	0	0	0	0	0	3	4	0	0	7	0	0	0	0	0	8	40
	3:00 PM	0	9	0	0	9	0	3	0	0	3	0	1	0	0	1	0	0	0	0	0	13	39
	3:15 PM	0	3	0	0	3	0	1	1	0	2	0	3	0	0	3	0	1	0	0	1	9	33
	3:30 PM	0	0	0	0	0	0	0	2	0	2	2	2	0	0	4	0	4	0	0	4	10	29
	3:45 PM	0	0	0	0	0	0	3	2	0	5	0	2	0	0	2	0	0	0	0	0	7	31
	4:00 PM	0	2	0	0	2	1	1	0	0	2	0	0	0	0	0	0	2	1	0	3	7	29
	4:15 PM	0	1	0	0	1	1	0	2	0	3	0	1	0	0	1	0	0	0	0	0	5	24
	4:30 PM	0	6	0	0	6	0	0	2	0	2	0	3	0	0	3	1	0	0	0	1	12	21
	4:45 PM	0	2	0	0	2	0	0	2	0	2	0	1	0	0	1	0	0	0	0	0	5	
	5:00 PM	0	0	0	0	0	0	0	0	0	0	1	1	0	0	2	0	0	0	0	0	2	
	5:15 PM	0	0	0	0	0	0	0	0	0	0	0	2	0	0	2	0	0	0	0	0	2	
	5:30 PM	0	0	0	0	0	0	0	0	0	0	0	0	0	0	0	0	0	0	0	0	0	
	5:45 PM	0	0	0	0	0	0	0	0	0	0	0	0	0	0	0	0	0	0	0	0	0	
	6:00 PM	0	0	0	0	0	0	0	0	0	0	0	0	0	0	0	0	0	0	0	0	0	
	6:15 PM	0	0	0	0	0	0	0	0	0	0	0	0	0	0	0	0	0	0	0	0	0	
	6:30 PM	0	0	0	0	0	0	0	0	0	0	0	0	0	0	0	0	0	0	0	0	0	
	6:45 PM	0	0	0	0	0	0	0	0	0	0	0	0	0	0	0	0	0	0	0	0	0	
	7:00 PM	0	0	0	0	0	0	0	0	0	0	0	0	0	0	0	0	0	0	0	0	0	
	7:15 PM	0	0	0	0	0	0	0	0	0	0	0	0	0	0	0	0	0	0	0	0	0	
	7:30 PM	0	0	0	0	0	0	0	0	0	0	0	0	0	0	0	0	0	0	0	0	0	
	7:45 PM	0	0	0	0	0	0	0	0	0	0	0	0	0	0	0	0	0	0	0	0	0	
	8:00 PM	0	0	0	0	0	0	0	0	0	0	0	0	0	0	0	0	0	0	0	0	0	
	8:15 PM	0	0	0	0	0	0	0	0	0	0	0	0	0	0	0	0	0	0	0	0	0	
	8:30 PM	0	0	0	0	0	0	0	0	0	0	0	0	0	0	0	0	0	0	0	0	0	
	8:45 PM	0	0	0	0	0	0	0	0	0	0	0	0	0	0	0	0	0	0	0	0	0	
	9:00 PM	0	0	0	0	0	0	0	0	0	0	0	0	0	0	0	0	0	0	0	0	0	
	9:15 PM	0	0	0	0	0	0	0	0	0	0	0	0	0	0	0	0	0	0	0	0	0	
	9:30 PM	0	0	0	0	0	0	0	0	0	0	0	0	0	0	0	0	0	0	0	0	0	
	9:45 PM	0	0	0	0	0	0	0	0	0	0	0	0	0	0	0	0	0	0	0	0	0	
Totals		3	38	1	0	42	5	13	19	0	37	18	45	0	0	63	3	8	1	0	12	154	

Peak Hour Heavy Vehicle Volume Summary

	Hourly Time Period Start Time	From North (Main St) Right	Thru	Left	U-Tn	Total	From East (Green Bay Rd) Right	Thru	Left	U-Tn	Total	From South (Main St) Right	Thru	Left	U-Tn	Total	From West (Buntrock Ave) Right	Thru	Left	U-Tn	Total	Total Hourly Volume
AM	7:00 AM	3	7	0	0	10	2	5	5	0	12	7	10	0	0	17	2	1	0	0	3	42
MD	12:00 PM	0	0	0	0	0	0	0	0	0	0	0	0	0	0	0	0	0	0	0	0	0
PM	4:30 PM	0	8	0	0	8	0	0	4	0	4	1	7	0	0	8	1	0	0	0	1	21

Intersection Traffic Volume Report

Count Basics	Version 2013.J4.1		Page 1 of 11
Start Date:	Thursday, April 03, 2014	Weekday	Schools in Session
Total Number of Hours Counted: 5		Non-Holiday	No Special Events

Base Information, Observed (5) Hour and Estimated (24) Hour Volume Summaries

Intersection of: Main St and Riverview Dr

Site Information

Municipality	Village of Theinsville		
County	Ozaukee	WisDOT Region	SE
Traffic Control	Traffic Signal		
Roadway Names		North Direction	↑
North Leg	Main St		
East Leg	Riverview Dr		
South Leg	Main St		
West Leg			
Special Considerations			
Schools	In Session		
Holidays	None		
Special Events	None		
Special Pedestrians Observed			
Pre-school children	None		
Elementry school age children	None		
Visually impaired (white cane/helper dog)	None		
Elderly/disabled (except wheelchairs)	None		
Wheelchairs/electric scooters	None		
Other (describe)	None	None	

Count Information

Hrs Counted:	6:30 AM-8:30 AM and 2:30 PM-5:30 PM				
1st Day of Count	Thursday, April 03, 2014			Weather	
AM Peak Period	Thursday, April 03, 2014			Clear & Dry	
Midday Peak Period				Clear & Dry	
PM Peak Period	Thursday, April 03, 2014			Clear & Dry	
Calculated Peak Hours					
AM	7:15-8:15am	MD		PM	4:30-5:30pm
Peak Hours Selected for Analysis					
AM	7:00-8:00am	MD		PM	4:30-5:30pm
Daily/Seasonal Adjustment Group	(2) Urban Arterials & Collectors				
Count Expansion Group	(2) Urban Arterials & Collectors				
Daily/Seasonal Adjustment Factor	0.924		Count Expansion Factor	2.664	
Company Name	TADI			Manual Adj.	1.000
Observers	AM Peak Period	Jayne H			
	Midday Peak Period				
	PM Peak Period	Jayne H			
Comments	Version 2011.J4.1; Expansion Factor assumed 6:00AM to 8:00AM and 3:00PM to 6:00PM times on 2012 WisDOT Expansion Factor Spreadsheet.				

Observed 5 Hour Volume Summary

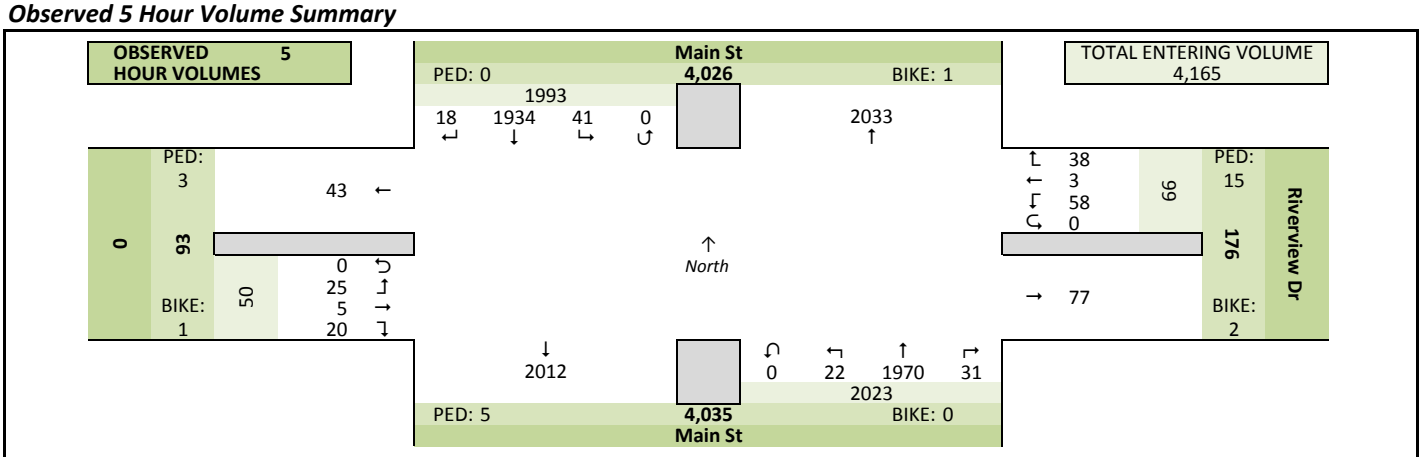

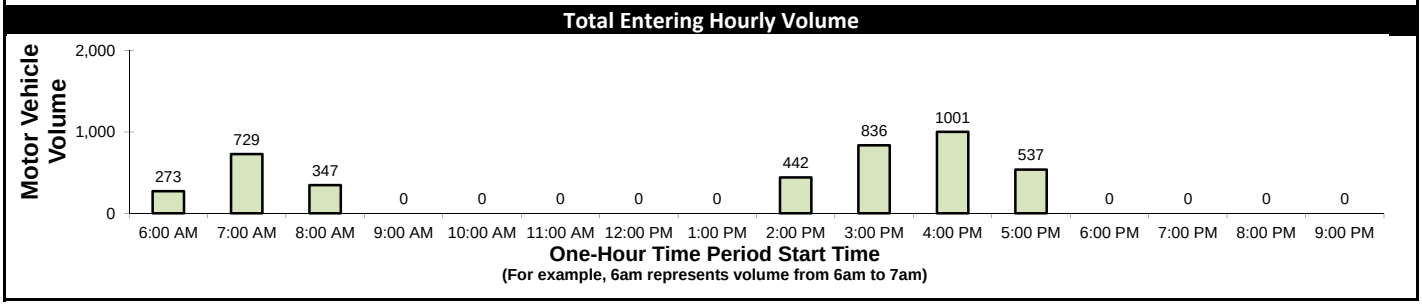

Estimated 24 Hour AADT

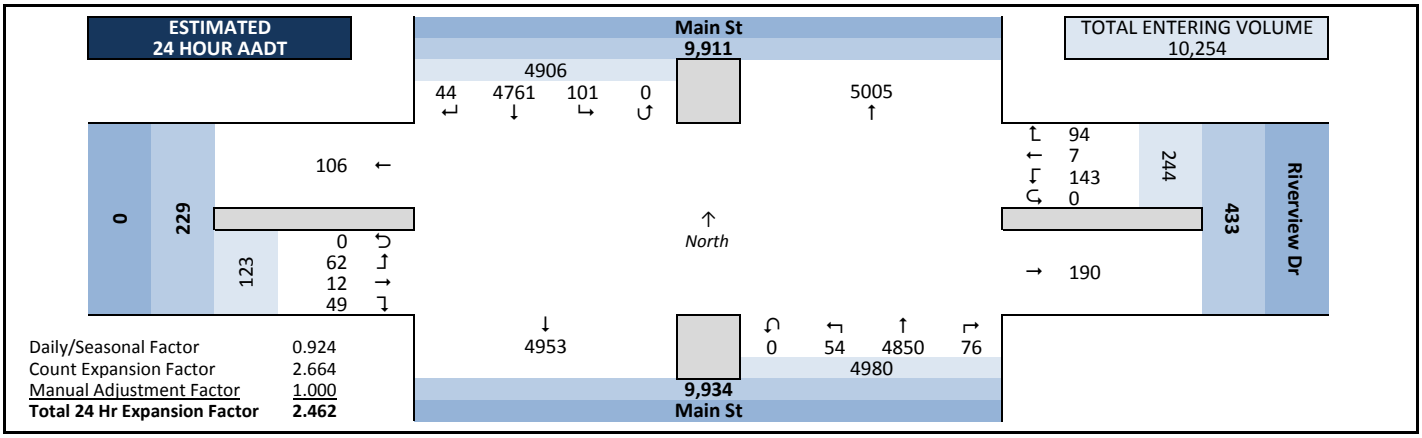

Daily/Seasonal Factor	0.924
Count Expansion Factor	2.664
Manual Adjustment Factor	1.000
Total 24 Hr Expansion Factor	**2.462**

Intersection Traffic Volume Report

Count Basics			Page 2 of 11
Start Date:	Thursday, April 03, 2014	Weekday	Schools in Session
Total Number of Hours Counted: 5		Non-Holiday	No Special Events

Peak Hour Volume Graphical Summary

All Motor Vehicles

Main St and Riverview Dr

AM Peak Hour Summary

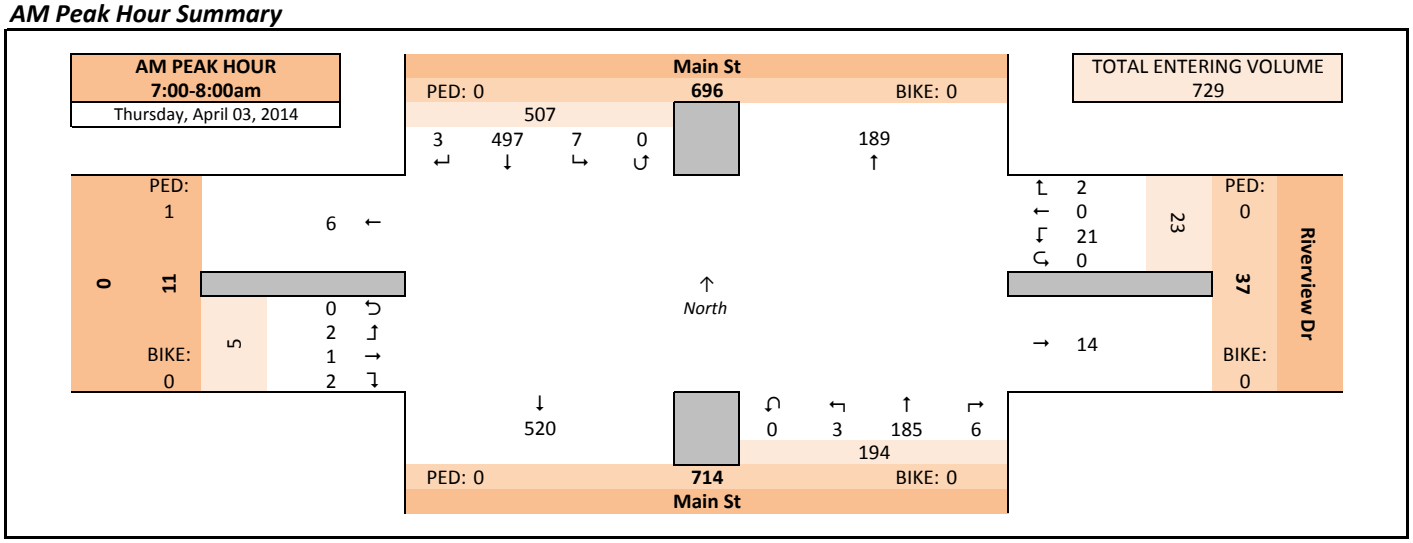

Midday (MD) Peak Hour Summary

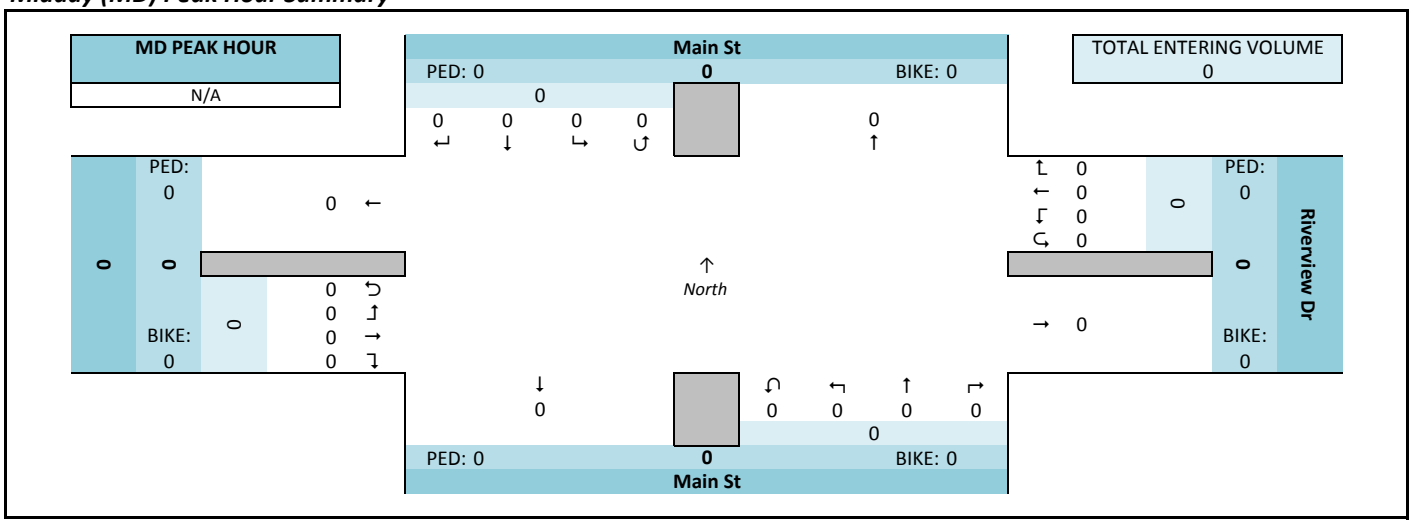

PM Peak Hour Summary

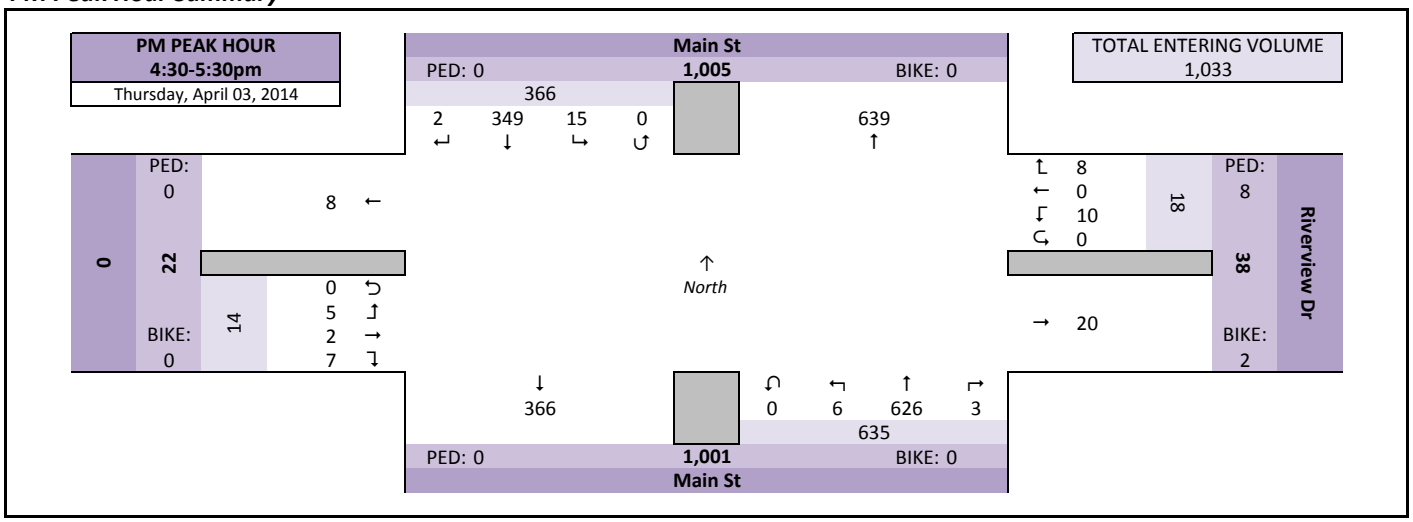

Intersection Traffic Volume Report

Count Basics			Page 3 of 11
Start Date:	Thursday, April 03, 2014	Weekday	Schools in Session
Total Number of Hours Counted: 5		Non-Holiday	No Special Events

Peak Hour Volume Summary

Main St and Riverview Dr

All Motor Vehicles

Peak Hour Volumes, Truck Percentages, and PHFs

Thursday, April 03, 2014		From North					From East					From South					From West					
	AM Peak Hour	Main St					Riverview Dr					Main St					0					
	Start Time	Right	Thru	Left	U-Tn	Total	Right	Thru	Left	U-Tn	Total	Right	Thru	Left	U-Tn	Total	Right	Thru	Left	U-Tn	Total	Totals
AM Peak Hour	7:00 AM	0	93	1	0	94	0	0	10	0	10	3	39	0	0	42	0	1	0	0	1	147
	7:15 AM	1	108	1	0	110	1	0	3	0	4	0	54	1	0	55	0	0	1	0	1	170
	7:30 AM	1	141	1	0	143	1	0	6	0	7	2	30	1	0	33	0	0	1	0	1	184
	7:45 AM	1	155	4	0	160	0	0	2	0	2	1	62	1	0	64	2	0	0	0	2	228
	Peak Hour Volume	3	497	7	0	507	2	0	21	0	23	6	185	3	0	194	2	1	2	0	5	729
	Rounded Hourly Volume	5	495	5	0	505	0	0	20	0	20	5	185	5	0	195	0	0	0	0	0	720
	% Single Unit Trucks	0.0	1.6	0.0	0.0	1.6	0.0	0.0	0.0	0.0	0.0	0.0	7.6	0.0	0.0	7.2	0.0	0.0	0.0	0.0	0.0	3.0
	% Heavy Trucks	0.0	0.0	0.0	0.0	0.0	0.0	0.0	0.0	0.0	0.0	0.0	0.5	0.0	0.0	0.5	0.0	0.0	0.0	0.0	0.0	0.1
	% Trucks (Total)	0.0	1.6	0.0	0.0	1.6	0.0	0.0	0.0	0.0	0.0	0.0	8.1	0.0	0.0	7.7	0.0	0.0	0.0	0.0	0.0	3.2
	Peak Hour Factor (PHF)	0.75	0.80	0.44	0.00	0.79	0.50	0.00	0.52	0.00	0.57	0.50	0.75	0.75	0.00	0.76	0.25	0.25	0.50	0.00	0.62	0.80

N/A		From North					From East					From South					From West					
	MD Peak Hour	Main St					Riverview Dr					Main St					0					
	Start Time	Right	Thru	Left	U-Tn	Total	Right	Thru	Left	U-Tn	Total	Right	Thru	Left	U-Tn	Total	Right	Thru	Left	U-Tn	Total	Totals
Midday (MD) Peak Hour	12:00 PM	0	0	0	0	0	0	0	0	0	0	0	0	0	0	0	0	0	0	0	0	0
	12:15 PM	0	0	0	0	0	0	0	0	0	0	0	0	0	0	0	0	0	0	0	0	0
	12:30 PM	0	0	0	0	0	0	0	0	0	0	0	0	0	0	0	0	0	0	0	0	0
	12:45 PM	0	0	0	0	0	0	0	0	0	0	0	0	0	0	0	0	0	0	0	0	0
	Peak Hour Volume	0	0	0	0	0	0	0	0	0	0	0	0	0	0	0	0	0	0	0	0	0
	Rounded Hourly Volume	0	0	0	0	0	0	0	0	0	0	0	0	0	0	0	0	0	0	0	0	0
	% Single Unit Trucks	0.0	0.0	0.0	0.0	0.0	0.0	0.0	0.0	0.0	0.0	0.0	0.0	0.0	0.0	0.0	0.0	0.0	0.0	0.0	0.0	0.0
	% Heavy Trucks	0.0	0.0	0.0	0.0	0.0	0.0	0.0	0.0	0.0	0.0	0.0	0.0	0.0	0.0	0.0	0.0	0.0	0.0	0.0	0.0	0.0
	% Trucks (Total)	0.0	0.0	0.0	0.0	0.0	0.0	0.0	0.0	0.0	0.0	0.0	0.0	0.0	0.0	0.0	0.0	0.0	0.0	0.0	0.0	0.0
	Peak Hour Factor (PHF)	0.00	0.00	0.00	0.00	0.00	0.00	0.00	0.00	0.00	0.00	0.00	0.00	0.00	0.00	0.00	0.00	0.00	0.00	0.00	0.00	0.00

Thursday, April 03, 2014		From North					From East					From South					From West					
	PM Peak Hour	Main St					Riverview Dr					Main St					0					
	Start Time	Right	Thru	Left	U-Tn	Total	Right	Thru	Left	U-Tn	Total	Right	Thru	Left	U-Tn	Total	Right	Thru	Left	U-Tn	Total	Totals
PM Peak Hour	4:30 PM	1	87	1	0	89	2	0	4	0	6	1	134	3	0	138	1	1	0	0	2	235
	4:45 PM	1	95	4	0	100	5	0	4	0	9	1	144	1	0	146	2	0	4	0	6	261
	5:00 PM	0	86	5	0	91	0	0	1	0	1	0	184	2	0	186	1	1	1	0	3	281
	5:15 PM	0	81	5	0	86	1	0	1	0	2	1	164	0	0	165	3	0	0	0	3	256
	Peak Hour Volume	2	349	15	0	366	8	0	10	0	18	3	626	6	0	635	7	2	5	0	14	1033
	Rounded Hourly Volume	0	350	15	0	365	10	0	10	0	20	5	625	5	0	635	5	0	5	0	10	1030
	% Single Unit Trucks	0.0	2.0	0.0	0.0	1.9	0.0	0.0	10.0	0.0	5.6	0.0	0.3	0.0	0.0	0.3	0.0	0.0	0.0	0.0	0.0	1.0
	% Heavy Trucks	0.0	0.6	0.0	0.0	0.5	0.0	0.0	0.0	0.0	0.0	0.0	0.3	0.0	0.0	0.3	0.0	0.0	0.0	0.0	0.0	0.4
	% Trucks (Total)	0.0	2.6	0.0	0.0	2.5	0.0	0.0	10.0	0.0	5.6	0.0	0.6	0.0	0.0	0.6	0.0	0.0	0.0	0.0	0.0	1.4
	Peak Hour Factor (PHF)	0.50	0.92	0.75	0.00	0.91	0.40	0.00	0.62	0.00	0.50	0.75	0.85	0.50	0.00	0.85	0.58	0.50	0.31	0.00	0.58	0.92

Peak Hour Pedestrian and Bicyclist Volumes

Pedestrians and Bicyclists		Crossing North Approach			Crossing East Approach			Crossing South Approach			Crossing West Approach			Total Ped & Bike Volume
		Main St			Riverview Dr			Main St			0			
	15-Minute Start Time	Pedestrian	Bicyclist	Total	Pedestrian	Bicyclist	Total	Pedestrian	Bicyclist	Total	Pedestrian	Bicyclist	Total	
AM	7:00 AM	0	0	0	0	0	0	0	0	0	0	0	0	0
	7:15 AM	0	0	0	0	0	0	0	0	0	0	0	0	0
	7:30 AM	0	0	0	0	0	0	0	0	0	0	0	0	0
	7:45 AM	0	0	0	0	0	0	0	0	0	1	0	1	1
	Total	0	0	0	0	0	0	0	0	0	1	0	1	1
MD	12:00 PM	0	0	0	0	0	0	0	0	0	0	0	0	0
	12:15 PM	0	0	0	0	0	0	0	0	0	0	0	0	0
	12:30 PM	0	0	0	0	0	0	0	0	0	0	0	0	0
	12:45 PM	0	0	0	0	0	0	0	0	0	0	0	0	0
	Total	0	0	0	0	0	0	0	0	0	0	0	0	0
PM	4:30 PM	0	0	0	1	0	1	0	0	0	0	0	0	1
	4:45 PM	0	0	0	0	0	0	0	0	0	0	0	0	0
	5:00 PM	0	0	0	0	1	1	0	0	0	0	0	0	1
	5:15 PM	0	0	0	7	1	8	0	0	0	0	0	0	8
	Total	0	0	0	8	2	10	0	0	0	0	0	0	10

Intersection Traffic Volume Report

Count Basics		*Page 5 of 11*
Start Date: Thursday, April 03, 2014	Weekday	Schools in Session
Total Number of Hours Counted: 5	Non-Holiday	No Special Events

15-Minute Motor Vehicle Data

All Motor Vehicles

Main St and Riverview Dr

15-Minute Motor Vehicle Data

15-Minute Time Period Start Time		From North (Main St) Right	Thru	Left	U-Tn	Total	From East (Riverview Dr) Right	Thru	Left	U-Tn	Total	From South (Main St) Right	Thru	Left	U-Tn	Total	From West (0) Right	Thru	Left	U-Tn	Total	15-Min Totals	Hourly Sum	PHF
AM Peak Period	6:00 AM	0	0	0	0	0	0	0	0	0	0	0	0	0	0	0	0	0	0	0	0	0		
	6:15 AM	0	0	0	0	0	0	0	0	0	0	0	0	0	0	0	0	0	0	0	0	0		
	6:30 AM	0	90	4	0	94	1	0	1	0	2	2	27	0	0	29	0	0	0	0	0	125	590	0.87
	6:45 AM	0	101	1	0	102	4	0	6	0	10	1	35	0	0	36	0	0	0	0	0	148	649	0.88
	7:00 AM	0	93	1	0	94	0	0	10	0	10	3	39	0	0	42	0	1	0	0	1	147	729	0.80
	7:15 AM	1	108	1	0	110	1	0	3	0	4	0	54	1	0	55	0	0	1	0	1	170	768	0.84
	7:30 AM	1	141	1	0	143	1	0	6	0	7	2	30	1	0	33	0	0	1	0	1	184	759	0.83
	7:45 AM	1	155	4	0	160	0	0	2	0	2	1	62	1	0	64	2	0	0	0	2	228		
	8:00 AM	1	134	3	0	138	2	0	2	0	4	1	41	0	0	42	0	0	2	0	2	186		
	8:15 AM	0	90	0	0	90	0	0	2	0	2	4	64	1	0	69	0	0	0	0	0	161		
	8:30 AM	0	0	0	0	0	0	0	0	0	0	0	0	0	0	0	0	0	0	0	0	0		
	8:45 AM	0	0	0	0	0	0	0	0	0	0	0	0	0	0	0	0	0	0	0	0	0		
	9:00 AM	0	0	0	0	0	0	0	0	0	0	0	0	0	0	0	0	0	0	0	0	0		
	9:15 AM	0	0	0	0	0	0	0	0	0	0	0	0	0	0	0	0	0	0	0	0	0		
	9:30 AM	0	0	0	0	0	0	0	0	0	0	0	0	0	0	0	0	0	0	0	0	0		
	9:45 AM	0	0	0	0	0	0	0	0	0	0	0	0	0	0	0	0	0	0	0	0	0		
Midday Peak Period	10:00 AM	0	0	0	0	0	0	0	0	0	0	0	0	0	0	0	0	0	0	0	0	0		
	10:15 AM	0	0	0	0	0	0	0	0	0	0	0	0	0	0	0	0	0	0	0	0	0		
	10:30 AM	0	0	0	0	0	0	0	0	0	0	0	0	0	0	0	0	0	0	0	0	0		
	10:45 AM	0	0	0	0	0	0	0	0	0	0	0	0	0	0	0	0	0	0	0	0	0		
	11:00 AM	0	0	0	0	0	0	0	0	0	0	0	0	0	0	0	0	0	0	0	0	0		
	11:15 AM	0	0	0	0	0	0	0	0	0	0	0	0	0	0	0	0	0	0	0	0	0		
	11:30 AM	0	0	0	0	0	0	0	0	0	0	0	0	0	0	0	0	0	0	0	0	0		
	11:45 AM	0	0	0	0	0	0	0	0	0	0	0	0	0	0	0	0	0	0	0	0	0		
	12:00 PM	0	0	0	0	0	0	0	0	0	0	0	0	0	0	0	0	0	0	0	0	0		
	12:15 PM	0	0	0	0	0	0	0	0	0	0	0	0	0	0	0	0	0	0	0	0	0		
	12:30 PM	0	0	0	0	0	0	0	0	0	0	0	0	0	0	0	0	0	0	0	0	0		
	12:45 PM	0	0	0	0	0	0	0	0	0	0	0	0	0	0	0	0	0	0	0	0	0		
	1:00 PM	0	0	0	0	0	0	0	0	0	0	0	0	0	0	0	0	0	0	0	0	0		
	1:15 PM	0	0	0	0	0	0	0	0	0	0	0	0	0	0	0	0	0	0	0	0	0		
	1:30 PM	0	0	0	0	0	0	0	0	0	0	0	0	0	0	0	0	0	0	0	0	0		
	1:45 PM	0	0	0	0	0	0	0	0	0	0	0	0	0	0	0	0	0	0	0	0	0		
PM Peak Period	2:00 PM	0	0	0	0	0	0	0	0	0	0	0	0	0	0	0	0	0	0	0	0	0		
	2:15 PM	0	0	0	0	0	0	0	0	0	0	0	0	0	0	0	0	0	0	0	0	0		
	2:30 PM	3	72	2	0	77	6	1	1	0	8	1	99	1	0	101	4	1	0	0	5	191	859	0.86
	2:45 PM	1	107	2	0	110	1	1	0	0	2	3	126	4	0	133	2	0	4	0	6	251	879	0.88
	3:00 PM	1	102	0	0	103	1	0	2	0	3	0	121	2	0	123	0	0	2	0	2	231	836	0.90
	3:15 PM	0	59	0	0	59	4	0	3	0	7	1	117	1	0	119	1	0	0	0	1	186	869	0.82
	3:30 PM	2	81	1	0	84	2	0	3	0	5	0	120	1	0	121	0	0	1	0	1	211	924	0.88
	3:45 PM	1	84	1	0	86	3	0	1	0	4	1	113	1	0	115	1	0	2	0	3	208	948	0.90
	4:00 PM	2	89	2	0	93	2	0	3	0	5	4	160	0	0	164	0	1	1	0	2	264	1001	0.95
	4:15 PM	2	79	3	0	84	2	1	3	0	6	4	136	2	0	142	3	0	6	0	9	241	1018	0.91
	4:30 PM	1	87	1	0	89	2	0	4	0	6	1	134	3	0	138	1	1	0	0	2	235	1033	0.92
	4:45 PM	1	95	4	0	100	5	0	4	0	9	1	144	1	0	146	2	0	4	0	6	261		
	5:00 PM	0	86	5	0	91	0	0	1	0	1	0	184	2	0	186	1	1	1	0	3	281		
	5:15 PM	0	81	5	0	86	1	0	1	0	2	1	164	0	0	165	3	0	0	0	3	256		
	5:30 PM	0	0	0	0	0	0	0	0	0	0	0	0	0	0	0	0	0	0	0	0	0		
	5:45 PM	0	0	0	0	0	0	0	0	0	0	0	0	0	0	0	0	0	0	0	0	0		
	6:00 PM	0	0	0	0	0	0	0	0	0	0	0	0	0	0	0	0	0	0	0	0	0		
	6:15 PM	0	0	0	0	0	0	0	0	0	0	0	0	0	0	0	0	0	0	0	0	0		
	6:30 PM	0	0	0	0	0	0	0	0	0	0	0	0	0	0	0	0	0	0	0	0	0		
	6:45 PM	0	0	0	0	0	0	0	0	0	0	0	0	0	0	0	0	0	0	0	0	0		
	7:00 PM	0	0	0	0	0	0	0	0	0	0	0	0	0	0	0	0	0	0	0	0	0		
	7:15 PM	0	0	0	0	0	0	0	0	0	0	0	0	0	0	0	0	0	0	0	0	0		
	7:30 PM	0	0	0	0	0	0	0	0	0	0	0	0	0	0	0	0	0	0	0	0	0		
	7:45 PM	0	0	0	0	0	0	0	0	0	0	0	0	0	0	0	0	0	0	0	0	0		
	8:00 PM	0	0	0	0	0	0	0	0	0	0	0	0	0	0	0	0	0	0	0	0	0		
	8:15 PM	0	0	0	0	0	0	0	0	0	0	0	0	0	0	0	0	0	0	0	0	0		
	8:30 PM	0	0	0	0	0	0	0	0	0	0	0	0	0	0	0	0	0	0	0	0	0		
	8:45 PM	0	0	0	0	0	0	0	0	0	0	0	0	0	0	0	0	0	0	0	0	0		
	9:00 PM	0	0	0	0	0	0	0	0	0	0	0	0	0	0	0	0	0	0	0	0	0		
	9:15 PM	0	0	0	0	0	0	0	0	0	0	0	0	0	0	0	0	0	0	0	0	0		
	9:30 PM	0	0	0	0	0	0	0	0	0	0	0	0	0	0	0	0	0	0	0	0	0		
	9:45 PM	0	0	0	0	0	0	0	0	0	0	0	0	0	0	0	0	0	0	0	0	0		
Totals		18	1934	41	0	1993	38	3	58	0	99	31	1970	22	0	2023	20	5	25	0	50	4165		

Peak Hour All Vehicle Volume Summary

Hourly Time Period Start Time		From North (Main St) Right	Thru	Left	U-Tn	Total	From East (Riverview Dr) Right	Thru	Left	U-Tn	Total	From South (Main St) Right	Thru	Left	U-Tn	Total	From West (0) Right	Thru	Left	U-Tn	Total	Total Hourly Volume	PHF
AM	7:00 AM	3	497	7	0	507	2	0	21	0	23	6	185	3	0	194	2	1	2	0	5	729	0.80
MD	12:00 PM	0	0	0	0	0	0	0	0	0	0	0	0	0	0	0	0	0	0	0	0	0	
PM	4:30 PM	2	349	15	0	366	8	0	10	0	18	3	626	6	0	635	7	2	5	0	14	1033	0.92

Intersection Traffic Volume Report

Count Basics			*Page 9 of 11*
Start Date:	Thursday, April 03, 2014	Weekday	Schools in Session
Total Number of Hours Counted: 5		Non-Holiday	No Special Events

15-Minute Heavy Vehicle Data

Heavy Vehicles (Single-Unit Trucks, Buses & Semi-Trucks)

Main St and Riverview Dr

15-Minute Heavy Vehicle Data

15-Minute Time Period Start Time		From North (Main St) Right	Thru	Left	U-Tn	Total	From East (Riverview Dr) Right	Thru	Left	U-Tn	Total	From South (Main St) Right	Thru	Left	U-Tn	Total	From West (0) Right	Thru	Left	U-Tn	Total	15-Min Totals	Hourly Sum
AM Peak Period	6:00 AM	0	0	0	0	0	0	0	0	0	0	0	0	0	0	0	0	0	0	0	0	0	
	6:15 AM	0	0	0	0	0	0	0	0	0	0	0	0	0	0	0	0	0	0	0	0	0	
	6:30 AM	0	0	0	0	0	0	0	0	0	0	0	0	0	0	0	0	0	0	0	0	0	13
	6:45 AM	0	1	0	0	1	0	0	0	0	0	0	2	0	0	2	0	0	0	0	0	3	21
	7:00 AM	0	1	0	0	1	0	0	0	0	0	0	7	0	0	7	0	0	0	0	0	8	23
	7:15 AM	0	0	0	0	0	0	0	0	0	0	0	2	0	0	2	0	0	0	0	0	2	20
	7:30 AM	0	5	0	0	5	0	0	0	0	0	0	3	0	0	3	0	0	0	0	0	8	24
	7:45 AM	0	2	0	0	2	0	0	0	0	0	0	3	0	0	3	0	0	0	0	0	5	
	8:00 AM	0	2	0	0	2	0	0	1	0	1	0	2	0	0	2	0	0	0	0	0	5	
	8:15 AM	0	2	0	0	2	0	0	0	0	0	1	2	1	0	4	0	0	0	0	0	6	
	8:30 AM	0	0	0	0	0	0	0	0	0	0	0	0	0	0	0	0	0	0	0	0	0	
	8:45 AM	0	0	0	0	0	0	0	0	0	0	0	0	0	0	0	0	0	0	0	0	0	
	9:00 AM	0	0	0	0	0	0	0	0	0	0	0	0	0	0	0	0	0	0	0	0	0	
	9:15 AM	0	0	0	0	0	0	0	0	0	0	0	0	0	0	0	0	0	0	0	0	0	
	9:30 AM	0	0	0	0	0	0	0	0	0	0	0	0	0	0	0	0	0	0	0	0	0	
	9:45 AM	0	0	0	0	0	0	0	0	0	0	0	0	0	0	0	0	0	0	0	0	0	
Midday Peak Period	10:00 AM	0	0	0	0	0	0	0	0	0	0	0	0	0	0	0	0	0	0	0	0	0	
	10:15 AM	0	0	0	0	0	0	0	0	0	0	0	0	0	0	0	0	0	0	0	0	0	
	10:30 AM	0	0	0	0	0	0	0	0	0	0	0	0	0	0	0	0	0	0	0	0	0	
	10:45 AM	0	0	0	0	0	0	0	0	0	0	0	0	0	0	0	0	0	0	0	0	0	
	11:00 AM	0	0	0	0	0	0	0	0	0	0	0	0	0	0	0	0	0	0	0	0	0	
	11:15 AM	0	0	0	0	0	0	0	0	0	0	0	0	0	0	0	0	0	0	0	0	0	
	11:30 AM	0	0	0	0	0	0	0	0	0	0	0	0	0	0	0	0	0	0	0	0	0	
	11:45 AM	0	0	0	0	0	0	0	0	0	0	0	0	0	0	0	0	0	0	0	0	0	
	12:00 PM	0	0	0	0	0	0	0	0	0	0	0	0	0	0	0	0	0	0	0	0	0	
	12:15 PM	0	0	0	0	0	0	0	0	0	0	0	0	0	0	0	0	0	0	0	0	0	
	12:30 PM	0	0	0	0	0	0	0	0	0	0	0	0	0	0	0	0	0	0	0	0	0	
	12:45 PM	0	0	0	0	0	0	0	0	0	0	0	0	0	0	0	0	0	0	0	0	0	
	1:00 PM	0	0	0	0	0	0	0	0	0	0	0	0	0	0	0	0	0	0	0	0	0	
	1:15 PM	0	0	0	0	0	0	0	0	0	0	0	0	0	0	0	0	0	0	0	0	0	
	1:30 PM	0	0	0	0	0	0	0	0	0	0	0	0	0	0	0	0	0	0	0	0	0	
	1:45 PM	0	0	0	0	0	0	0	0	0	0	0	0	0	0	0	0	0	0	0	0	0	
PM Peak Period	2:00 PM	0	0	0	0	0	0	0	0	0	0	0	0	0	0	0	0	0	0	0	0	0	
	2:15 PM	0	0	0	0	0	0	0	0	0	0	0	0	0	0	0	0	0	0	0	0	0	
	2:30 PM	0	1	0	0	1	1	0	0	0	1	0	1	0	0	1	1	0	0	0	1	4	26
	2:45 PM	0	4	0	0	4	0	0	0	0	0	0	4	0	0	4	0	0	0	0	0	8	25
	3:00 PM	0	6	0	0	6	0	0	0	0	0	0	4	0	0	4	0	0	0	0	0	10	20
	3:15 PM	0	2	0	0	2	0	0	0	0	0	0	2	0	0	2	0	0	0	0	0	4	14
	3:30 PM	0	1	0	0	1	0	0	0	0	0	0	2	0	0	2	0	0	0	0	0	3	12
	3:45 PM	0	2	0	0	2	0	0	0	0	0	0	1	0	0	1	0	0	0	0	0	3	18
	4:00 PM	0	2	0	0	2	0	0	0	0	0	1	1	0	0	2	0	0	0	0	0	4	16
	4:15 PM	0	0	0	0	0	0	0	0	0	0	1	1	0	0	2	0	0	0	0	0	2	15
	4:30 PM	0	7	0	0	7	0	0	1	0	1	0	1	0	0	1	0	0	0	0	0	9	14
	4:45 PM	0	0	0	0	0	0	0	0	0	0	0	1	0	0	1	0	0	0	0	0	1	
	5:00 PM	0	1	0	0	1	0	0	0	0	0	0	2	0	0	2	0	0	0	0	0	3	
	5:15 PM	0	1	0	0	1	0	0	0	0	0	0	0	0	0	0	0	0	0	0	0	1	
	5:30 PM	0	0	0	0	0	0	0	0	0	0	0	0	0	0	0	0	0	0	0	0	0	
	5:45 PM	0	0	0	0	0	0	0	0	0	0	0	0	0	0	0	0	0	0	0	0	0	
	6:00 PM	0	0	0	0	0	0	0	0	0	0	0	0	0	0	0	0	0	0	0	0	0	
	6:15 PM	0	0	0	0	0	0	0	0	0	0	0	0	0	0	0	0	0	0	0	0	0	
	6:30 PM	0	0	0	0	0	0	0	0	0	0	0	0	0	0	0	0	0	0	0	0	0	
	6:45 PM	0	0	0	0	0	0	0	0	0	0	0	0	0	0	0	0	0	0	0	0	0	
	7:00 PM	0	0	0	0	0	0	0	0	0	0	0	0	0	0	0	0	0	0	0	0	0	
	7:15 PM	0	0	0	0	0	0	0	0	0	0	0	0	0	0	0	0	0	0	0	0	0	
	7:30 PM	0	0	0	0	0	0	0	0	0	0	0	0	0	0	0	0	0	0	0	0	0	
	7:45 PM	0	0	0	0	0	0	0	0	0	0	0	0	0	0	0	0	0	0	0	0	0	
	8:00 PM	0	0	0	0	0	0	0	0	0	0	0	0	0	0	0	0	0	0	0	0	0	
	8:15 PM	0	0	0	0	0	0	0	0	0	0	0	0	0	0	0	0	0	0	0	0	0	
	8:30 PM	0	0	0	0	0	0	0	0	0	0	0	0	0	0	0	0	0	0	0	0	0	
	8:45 PM	0	0	0	0	0	0	0	0	0	0	0	0	0	0	0	0	0	0	0	0	0	
	9:00 PM	0	0	0	0	0	0	0	0	0	0	0	0	0	0	0	0	0	0	0	0	0	
	9:15 PM	0	0	0	0	0	0	0	0	0	0	0	0	0	0	0	0	0	0	0	0	0	
	9:30 PM	0	0	0	0	0	0	0	0	0	0	0	0	0	0	0	0	0	0	0	0	0	
	9:45 PM	0	0	0	0	0	0	0	0	0	0	0	0	0	0	0	0	0	0	0	0	0	
Totals		0	40	0	0	40	1	0	2	0	3	3	41	1	0	45	1	0	0	0	1	89	

Peak Hour Heavy Vehicle Volume Summary

Hourly Time Period Start Time		From North (Main St) Right	Thru	Left	U-Tn	Total	From East (Riverview Dr) Right	Thru	Left	U-Tn	Total	From South (Main St) Right	Thru	Left	U-Tn	Total	From West (0) Right	Thru	Left	U-Tn	Total	Total Hourly Volume
AM	7:00 AM	0	8	0	0	8	0	0	0	0	0	0	15	0	0	15	0	0	0	0	0	23
MD	12:00 PM	0	0	0	0	0	0	0	0	0	0	0	0	0	0	0	0	0	0	0	0	0
PM	4:30 PM	0	9	0	0	9	0	0	1	0	1	0	4	0	0	4	0	0	0	0	0	14

Intersection Traffic Volume Report

Count Basics	Version 2013.J4.1		Page 1 of 11
Start Date:	Tuesday, April 01, 2014	Weekday	Schools in Session
Total Number of Hours Counted: 5		Non-Holiday	No Special Events

Base Information, Observed (5) Hour and Estimated (24) Hour Volume Summaries

Intersection of: Main St and Freistadt Rd

Site Information

Municipality	Village of Theinsville		
County	Ozaukee	WisDOT Region	SE
Traffic Control	Traffic Signal		
Roadway Names		North Direction	↑
North Leg	Main St		
East Leg	Freistadt Rd		
South Leg	Main St		
West Leg	Freistadt Rd		
Special Considerations			
Schools	In Session		
Holidays	None		
Special Events	None		
Special Pedestrians Observed			
Pre-school children	None		
Elementry school age children	None		
Visually impaired (white cane/helper dog)	None		
Elderly/disabled (except wheelchairs)	None		
Wheelchairs/electric scooters	None		
Other (describe)	None	None	

Count Information

Hrs Counted:	6:30 AM-8:30 AM and 2:30 PM-5:30 PM				
1st Day of Count	Tuesday, April 01, 2014			Weather	
AM Peak Period	Thursday, April 03, 2014			Clear & Dry	
Midday Peak Period				Clear & Dry	
PM Peak Period	Tuesday, April 01, 2014			Clear & Dry	
Calculated Peak Hours					
AM	7:15-8:15am	MD		PM	4:15-5:15pm
Peak Hours Selected for Analysis					
AM	7:00-8:00am	MD		PM	4:30-5:30pm
Daily/Seasonal Adjustment Group	(2) Urban Arterials & Collectors				
Count Expansion Group	(2) Urban Arterials & Collectors				
Daily/Seasonal Adjustment Factor	0.940		Count Expansion Factor	2.664	
Company Name	TADI			Manual Adj.	1.000
Observers	AM Peak Period	Amy S			
	Midday Peak Period				
	PM Peak Period	Amy S			
Comments	Version 2011.J4.1; Expansion Factor assumed 6:00AM to 8:00AM and 3:00PM to 6:00PM times on 2012 WisDOT Expansion Factor Spreadsheet.				

Observed 5 Hour Volume Summary

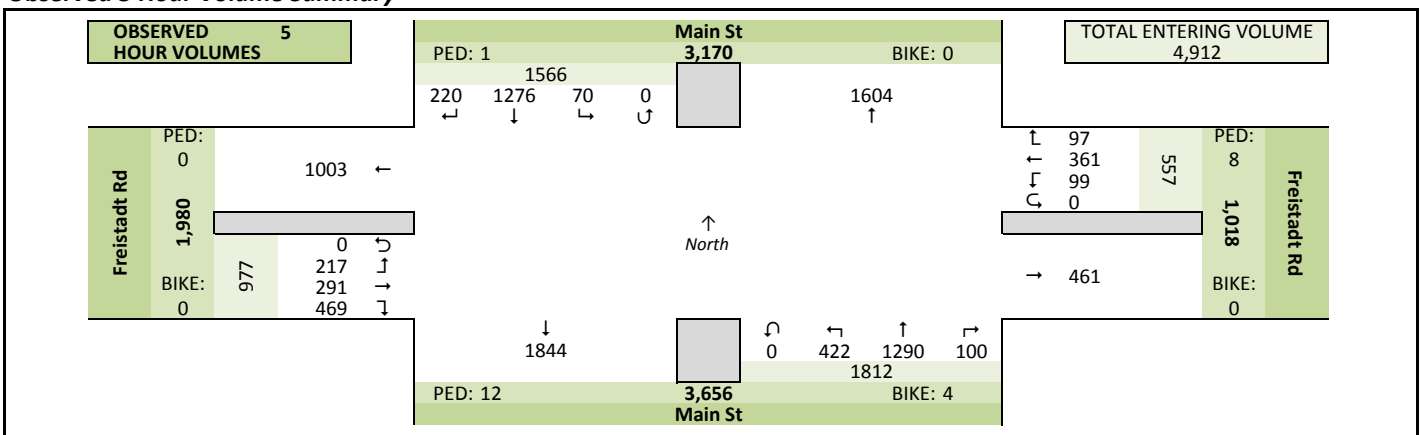

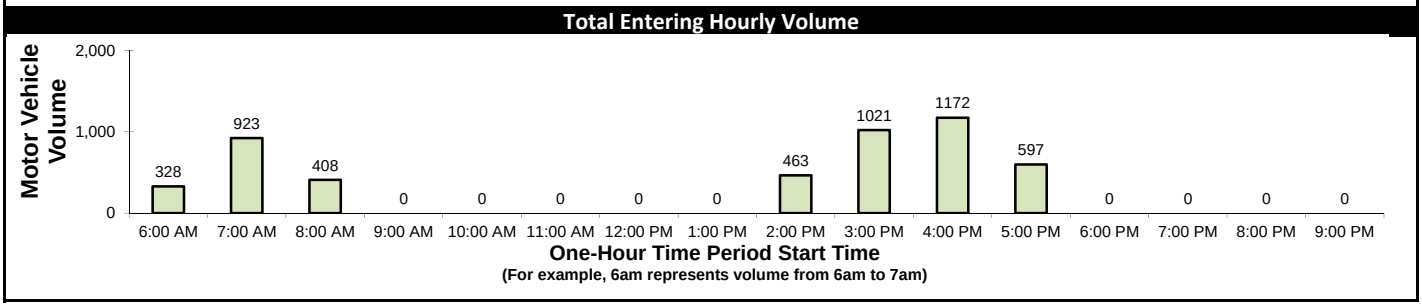

Estimated 24 Hour AADT

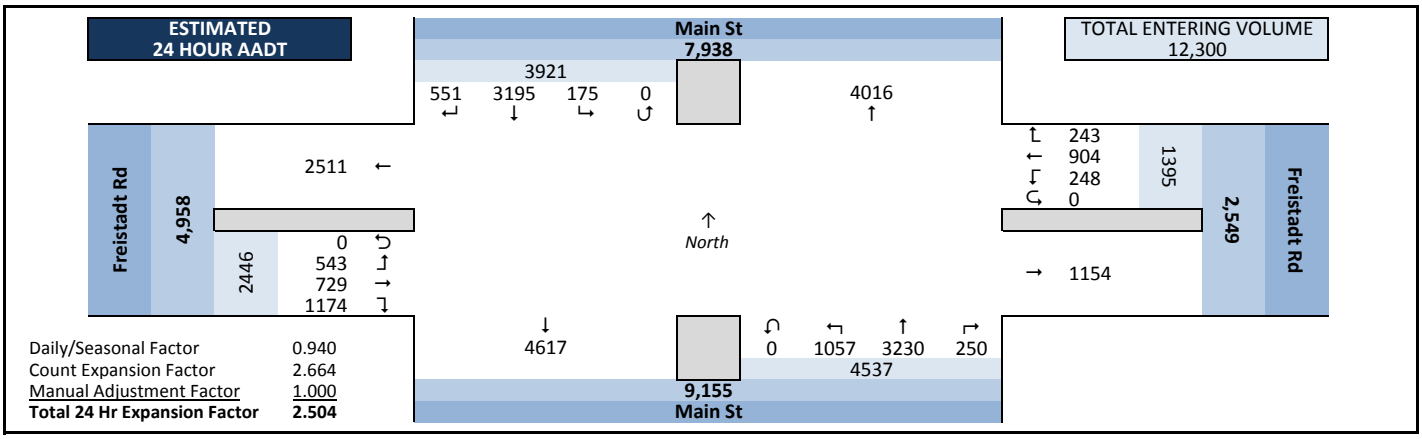

Daily/Seasonal Factor	0.940
Count Expansion Factor	2.664
Manual Adjustment Factor	1.000
Total 24 Hr Expansion Factor	**2.504**

Intersection Traffic Volume Report

Count Basics			Page 2 of 11
Start Date:	Tuesday, April 01, 2014	Weekday	Schools in Session
Total Number of Hours Counted: 5		Non-Holiday	No Special Events

Peak Hour Volume Graphical Summary

All Motor Vehicles

Main St and Freistadt Rd

AM Peak Hour Summary

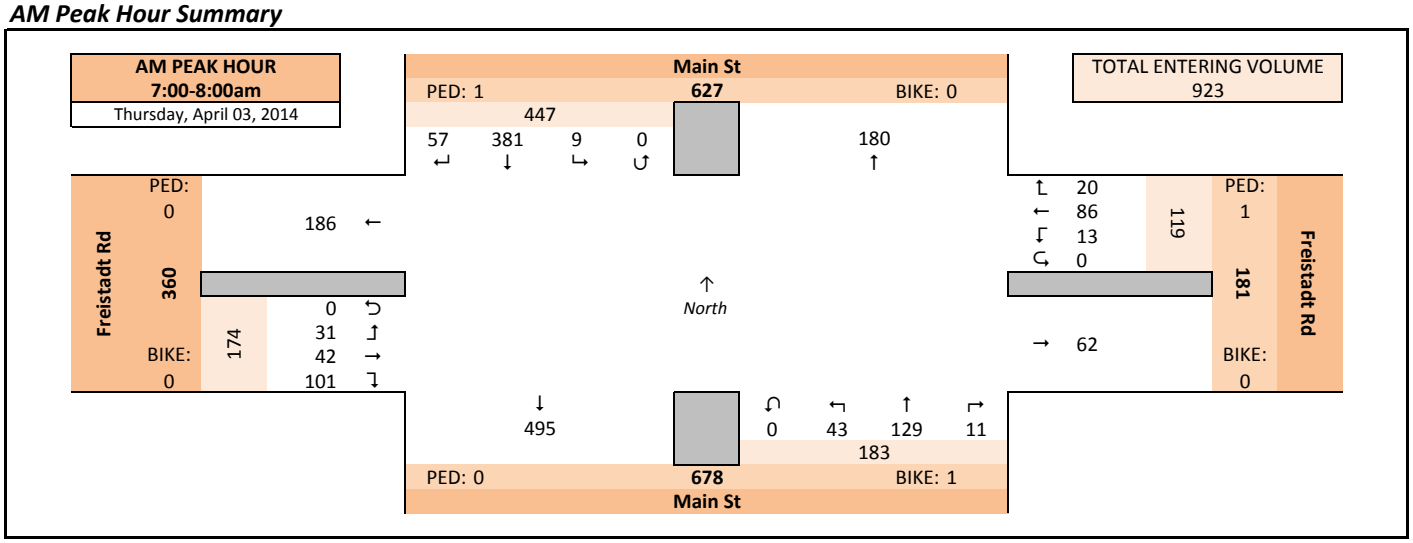

Midday (MD) Peak Hour Summary

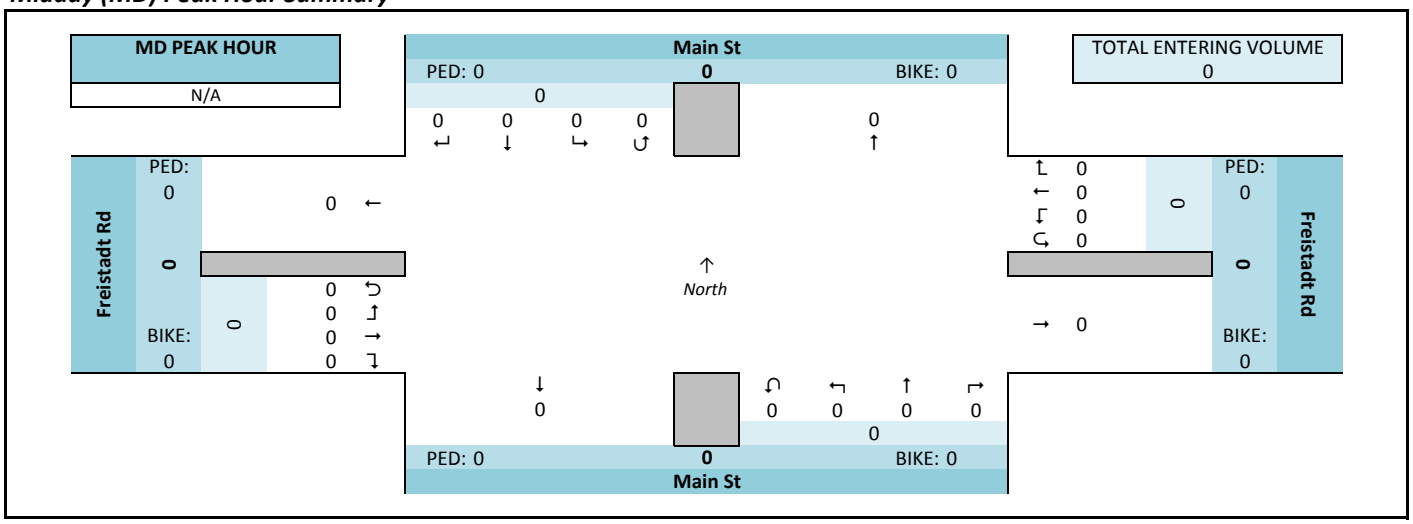

PM Peak Hour Summary

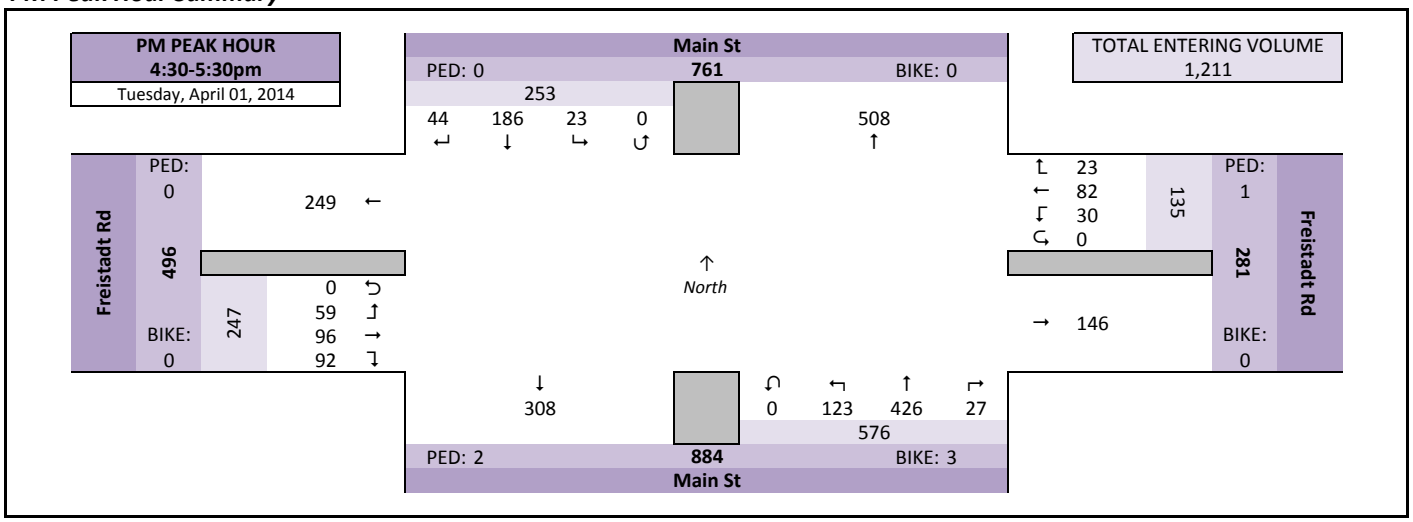

Intersection Traffic Volume Report

Count Basics			Page 3 of 11
Start Date:	Tuesday, April 01, 2014	Weekday	Schools in Session
Total Number of Hours Counted: 5		Non-Holiday	No Special Events

Peak Hour Volume Summary

Main St and Freistadt Rd

All Motor Vehicles

Peak Hour Volumes, Truck Percentages, and PHFs

Thursday, April 03, 2014		From North					From East					From South					From West					
	AM Peak Hour	Main St					Freistadt Rd					Main St					Freistadt Rd					
	Start Time	Right	Thru	Left	U-Tn	Total	Right	Thru	Left	U-Tn	Total	Right	Thru	Left	U-Tn	Total	Right	Thru	Left	U-Tn	Total	Totals
AM Peak Hour	7:00 AM	14	69	3	0	86	2	23	6	0	31	1	31	8	0	40	18	12	7	0	37	194
	7:15 AM	23	90	2	0	115	3	20	1	0	24	3	34	14	0	51	18	10	6	0	34	224
	7:30 AM	14	111	4	0	129	6	18	4	0	28	3	20	7	0	30	34	7	7	0	48	235
	7:45 AM	6	111	0	0	117	9	25	2	0	36	4	44	14	0	62	31	13	11	0	55	270
	Peak Hour Volume	57	381	9	0	447	20	86	13	0	119	11	129	43	0	183	101	42	31	0	174	923
	Rounded Hourly Volume	55	380	10	0	445	20	85	15	0	120	10	130	45	0	185	100	40	30	0	170	920
	% Single Unit Trucks	0.0	1.6	0.0	0.0	1.3	5.0	1.2	0.0	0.0	1.7	18.2	7.8	4.7	0.0	7.7	4.0	14.3	0.0	0.0	5.7	3.5
	% Heavy Trucks	0.0	0.0	0.0	0.0	0.0	0.0	0.0	0.0	0.0	0.0	0.0	0.0	2.3	0.0	0.5	0.0	4.8	0.0	0.0	1.1	0.3
	% Trucks (Total)	0.0	1.6	0.0	0.0	1.3	5.0	1.2	0.0	0.0	1.7	18.2	7.8	7.0	0.0	8.2	4.0	19.0	0.0	0.0	6.9	3.8
	Peak Hour Factor (PHF)	0.62	0.86	0.56	0.00	0.87	0.56	0.86	0.54	0.00	0.83	0.69	0.73	0.77	0.00	0.74	0.74	0.81	0.70	0.00	0.79	0.85

N/A		From North					From East					From South					From West					
	MD Peak Hour	Main St					Freistadt Rd					Main St					Freistadt Rd					
	Start Time	Right	Thru	Left	U-Tn	Total	Right	Thru	Left	U-Tn	Total	Right	Thru	Left	U-Tn	Total	Right	Thru	Left	U-Tn	Total	Totals
Midday (MD) Peak Hour	12:00 PM	0	0	0	0	0	0	0	0	0	0	0	0	0	0	0	0	0	0	0	0	0
	12:15 PM	0	0	0	0	0	0	0	0	0	0	0	0	0	0	0	0	0	0	0	0	0
	12:30 PM	0	0	0	0	0	0	0	0	0	0	0	0	0	0	0	0	0	0	0	0	0
	12:45 PM	0	0	0	0	0	0	0	0	0	0	0	0	0	0	0	0	0	0	0	0	0
	Peak Hour Volume	0	0	0	0	0	0	0	0	0	0	0	0	0	0	0	0	0	0	0	0	0
	Rounded Hourly Volume	0	0	0	0	0	0	0	0	0	0	0	0	0	0	0	0	0	0	0	0	0
	% Single Unit Trucks	0.0	0.0	0.0	0.0	0.0	0.0	0.0	0.0	0.0	0.0	0.0	0.0	0.0	0.0	0.0	0.0	0.0	0.0	0.0	0.0	0.0
	% Heavy Trucks	0.0	0.0	0.0	0.0	0.0	0.0	0.0	0.0	0.0	0.0	0.0	0.0	0.0	0.0	0.0	0.0	0.0	0.0	0.0	0.0	0.0
	% Trucks (Total)	0.0	0.0	0.0	0.0	0.0	0.0	0.0	0.0	0.0	0.0	0.0	0.0	0.0	0.0	0.0	0.0	0.0	0.0	0.0	0.0	0.0
	Peak Hour Factor (PHF)	0.00	0.00	0.00	0.00	0.00	0.00	0.00	0.00	0.00	0.00	0.00	0.00	0.00	0.00	0.00	0.00	0.00	0.00	0.00	0.00	0.00

Tuesday, April 01, 2014		From North					From East					From South					From West					
	PM Peak Hour	Main St					Freistadt Rd					Main St					Freistadt Rd					
	Start Time	Right	Thru	Left	U-Tn	Total	Right	Thru	Left	U-Tn	Total	Right	Thru	Left	U-Tn	Total	Right	Thru	Left	U-Tn	Total	Totals
PM Peak Hour	4:30 PM	12	29	8	0	49	6	24	10	0	40	8	85	25	0	118	21	26	10	0	57	264
	4:45 PM	13	61	4	0	78	6	28	8	0	42	10	94	38	0	142	34	33	21	0	88	350
	5:00 PM	9	57	5	0	71	8	18	6	0	32	5	124	32	0	161	23	15	16	0	54	318
	5:15 PM	10	39	6	0	55	3	12	6	0	21	4	123	28	0	155	14	22	12	0	48	279
	Peak Hour Volume	44	186	23	0	253	23	82	30	0	135	27	426	123	0	576	92	96	59	0	247	1211
	Rounded Hourly Volume	45	185	25	0	255	25	80	30	0	135	25	425	125	0	575	90	95	60	0	245	1210
	% Single Unit Trucks	2.3	1.1	0.0	0.0	1.2	0.0	2.4	0.0	0.0	1.5	3.7	0.5	0.0	0.0	0.5	0.0	0.0	0.0	0.0	0.0	0.7
	% Heavy Trucks	0.0	0.0	0.0	0.0	0.0	0.0	0.0	0.0	0.0	0.0	0.0	0.0	0.8	0.0	0.2	1.1	0.0	0.0	0.0	0.4	0.2
	% Trucks (Total)	2.3	1.1	0.0	0.0	1.2	0.0	2.4	0.0	0.0	1.5	3.7	0.5	0.8	0.0	0.7	1.1	0.0	0.0	0.0	0.4	0.8
	Peak Hour Factor (PHF)	0.85	0.76	0.72	0.00	0.81	0.72	0.73	0.75	0.00	0.80	0.67	0.86	0.81	0.00	0.89	0.68	0.73	0.70	0.00	0.70	0.86

Peak Hour Pedestrian and Bicyclist Volumes

Pedestrians and Bicyclists		Crossing North Approach			Crossing East Approach			Crossing South Approach			Crossing West Approach			Total Ped & Bike Volume
		Main St			Freistadt Rd			Main St			Freistadt Rd			
	15-Minute Start Time	Pedestrian	Bicyclist	Total	Pedestrian	Bicyclist	Total	Pedestrian	Bicyclist	Total	Pedestrian	Bicyclist	Total	
AM	7:00 AM	0	0	0	0	0	0	0	0	0	0	0	0	0
	7:15 AM	0	0	0	0	0	0	0	0	0	0	0	0	0
	7:30 AM	1	0	1	0	0	0	0	1	1	0	0	0	2
	7:45 AM	0	0	0	1	0	1	0	0	0	0	0	0	1
	Total	1	0	1	1	0	1	0	1	1	0	0	0	3
MD	12:00 PM	0	0	0	0	0	0	0	0	0	0	0	0	0
	12:15 PM	0	0	0	0	0	0	0	0	0	0	0	0	0
	12:30 PM	0	0	0	0	0	0	0	0	0	0	0	0	0
	12:45 PM	0	0	0	0	0	0	0	0	0	0	0	0	0
	Total	0	0	0	0	0	0	0	0	0	0	0	0	0
PM	4:30 PM	0	0	0	1	0	1	2	1	3	0	0	0	4
	4:45 PM	0	0	0	0	0	0	0	1	1	0	0	0	1
	5:00 PM	0	0	0	0	0	0	0	1	1	0	0	0	1
	5:15 PM	0	0	0	0	0	0	0	0	0	0	0	0	0
	Total	0	0	0	1	0	1	2	3	5	0	0	0	6

Intersection Traffic Volume Report

Count Basics		*Page 5 of 11*
Start Date: Tuesday, April 01, 2014	Weekday	Schools in Session
Total Number of Hours Counted: 5	Non-Holiday	No Special Events

15-Minute Motor Vehicle Data

All Motor Vehicles

Main St and Freistadt Rd

15-Minute Motor Vehicle Data

15-Minute Time Period Start Time		From North (Main St) Right	Thru	Left	U-Tn	Total	From East (Freistadt Rd) Right	Thru	Left	U-Tn	Total	From South (Main St) Right	Thru	Left	U-Tn	Total	From West (Freistadt Rd) Right	Thru	Left	U-Tn	Total	15-Min Totals	Hourly Sum	PHF
AM Peak Period	6:00 AM	0	0	0	0	0	0	0	0	0	0	0	0	0	0	0	0	0	0	0	0	0		
	6:15 AM	0	0	0	0	0	0	0	0	0	0	0	0	0	0	0	0	0	0	0	0	0		
	6:30 AM	11	63	1	0	75	1	16	2	0	19	3	17	6	0	26	22	3	2	0	27	147	746	0.83
	6:45 AM	9	88	1	0	98	4	22	0	0	26	1	23	10	0	34	13	5	5	0	23	181	834	0.89
	7:00 AM	14	69	3	0	86	2	23	6	0	31	1	31	8	0	40	18	12	7	0	37	194	923	0.85
	7:15 AM	23	90	2	0	115	3	20	1	0	24	3	34	14	0	51	18	10	6	0	34	224	942	0.87
	7:30 AM	14	111	4	0	129	6	18	4	0	28	3	20	7	0	30	34	7	7	0	48	235	913	0.85
	7:45 AM	6	111	0	0	117	9	25	2	0	36	4	44	14	0	62	31	13	11	0	55	270		
	8:00 AM	8	105	2	0	115	2	22	5	0	29	2	30	6	0	38	23	4	4	0	31	213		
	8:15 AM	9	70	4	0	83	4	14	4	0	22	3	42	8	0	53	11	15	11	0	37	195		
	8:30 AM	0	0	0	0	0	0	0	0	0	0	0	0	0	0	0	0	0	0	0	0	0		
	8:45 AM	0	0	0	0	0	0	0	0	0	0	0	0	0	0	0	0	0	0	0	0	0		
	9:00 AM	0	0	0	0	0	0	0	0	0	0	0	0	0	0	0	0	0	0	0	0	0		
	9:15 AM	0	0	0	0	0	0	0	0	0	0	0	0	0	0	0	0	0	0	0	0	0		
	9:30 AM	0	0	0	0	0	0	0	0	0	0	0	0	0	0	0	0	0	0	0	0	0		
	9:45 AM	0	0	0	0	0	0	0	0	0	0	0	0	0	0	0	0	0	0	0	0	0		
Midday Peak Period	10:00 AM	0	0	0	0	0	0	0	0	0	0	0	0	0	0	0	0	0	0	0	0	0		
	10:15 AM	0	0	0	0	0	0	0	0	0	0	0	0	0	0	0	0	0	0	0	0	0		
	10:30 AM	0	0	0	0	0	0	0	0	0	0	0	0	0	0	0	0	0	0	0	0	0		
	10:45 AM	0	0	0	0	0	0	0	0	0	0	0	0	0	0	0	0	0	0	0	0	0		
	11:00 AM	0	0	0	0	0	0	0	0	0	0	0	0	0	0	0	0	0	0	0	0	0		
	11:15 AM	0	0	0	0	0	0	0	0	0	0	0	0	0	0	0	0	0	0	0	0	0		
	11:30 AM	0	0	0	0	0	0	0	0	0	0	0	0	0	0	0	0	0	0	0	0	0		
	11:45 AM	0	0	0	0	0	0	0	0	0	0	0	0	0	0	0	0	0	0	0	0	0		
	12:00 PM	0	0	0	0	0	0	0	0	0	0	0	0	0	0	0	0	0	0	0	0	0		
	12:15 PM	0	0	0	0	0	0	0	0	0	0	0	0	0	0	0	0	0	0	0	0	0		
	12:30 PM	0	0	0	0	0	0	0	0	0	0	0	0	0	0	0	0	0	0	0	0	0		
	12:45 PM	0	0	0	0	0	0	0	0	0	0	0	0	0	0	0	0	0	0	0	0	0		
	1:00 PM	0	0	0	0	0	0	0	0	0	0	0	0	0	0	0	0	0	0	0	0	0		
	1:15 PM	0	0	0	0	0	0	0	0	0	0	0	0	0	0	0	0	0	0	0	0	0		
	1:30 PM	0	0	0	0	0	0	0	0	0	0	0	0	0	0	0	0	0	0	0	0	0		
	1:45 PM	0	0	0	0	0	0	0	0	0	0	0	0	0	0	0	0	0	0	0	0	0		
PM Peak Period	2:00 PM	0	0	0	0	0	0	0	0	0	0	0	0	0	0	0	0	0	0	0	0	0		
	2:15 PM	0	0	0	0	0	0	0	0	0	0	0	0	0	0	0	0	0	0	0	0	0		
	2:30 PM	10	32	4	0	46	3	15	6	0	24	1	67	14	0	82	27	10	10	0	47	199	948	0.90
	2:45 PM	11	55	4	0	70	6	9	7	0	22	8	79	38	0	125	23	11	13	0	47	264	1017	0.95
	3:00 PM	8	60	7	0	75	3	19	7	0	29	6	65	26	0	97	28	9	7	0	44	245	1021	0.95
	3:15 PM	9	44	2	0	55	5	13	2	0	20	4	74	25	0	103	27	19	16	0	62	240	1042	0.97
	3:30 PM	4	51	5	0	60	3	16	8	0	27	14	84	26	0	124	28	17	12	0	57	268	1094	0.94
	3:45 PM	10	42	4	0	56	4	17	7	0	28	2	81	31	0	114	30	21	19	0	70	268	1090	0.93
	4:00 PM	13	53	0	0	66	8	12	5	0	25	9	82	38	0	129	23	12	11	0	46	266	1172	0.84
	4:15 PM	17	46	4	0	67	11	18	3	0	32	9	91	28	0	128	21	27	17	0	65	292	1224	0.87
	4:30 PM	12	29	8	0	49	6	24	10	0	40	8	85	25	0	118	21	26	10	0	57	264	1211	0.87
	4:45 PM	13	61	4	0	78	6	28	8	0	42	10	94	38	0	142	34	33	21	0	88	350		
	5:00 PM	9	57	5	0	71	8	18	6	0	32	5	124	32	0	161	23	15	16	0	54	318		
	5:15 PM	10	39	6	0	55	3	12	6	0	21	4	123	28	0	155	14	22	12	0	48	279		
	5:30 PM	0	0	0	0	0	0	0	0	0	0	0	0	0	0	0	0	0	0	0	0	0		
	5:45 PM	0	0	0	0	0	0	0	0	0	0	0	0	0	0	0	0	0	0	0	0	0		
	6:00 PM	0	0	0	0	0	0	0	0	0	0	0	0	0	0	0	0	0	0	0	0	0		
	6:15 PM	0	0	0	0	0	0	0	0	0	0	0	0	0	0	0	0	0	0	0	0	0		
	6:30 PM	0	0	0	0	0	0	0	0	0	0	0	0	0	0	0	0	0	0	0	0	0		
	6:45 PM	0	0	0	0	0	0	0	0	0	0	0	0	0	0	0	0	0	0	0	0	0		
	7:00 PM	0	0	0	0	0	0	0	0	0	0	0	0	0	0	0	0	0	0	0	0	0		
	7:15 PM	0	0	0	0	0	0	0	0	0	0	0	0	0	0	0	0	0	0	0	0	0		
	7:30 PM	0	0	0	0	0	0	0	0	0	0	0	0	0	0	0	0	0	0	0	0	0		
	7:45 PM	0	0	0	0	0	0	0	0	0	0	0	0	0	0	0	0	0	0	0	0	0		
	8:00 PM	0	0	0	0	0	0	0	0	0	0	0	0	0	0	0	0	0	0	0	0	0		
	8:15 PM	0	0	0	0	0	0	0	0	0	0	0	0	0	0	0	0	0	0	0	0	0		
	8:30 PM	0	0	0	0	0	0	0	0	0	0	0	0	0	0	0	0	0	0	0	0	0		
	8:45 PM	0	0	0	0	0	0	0	0	0	0	0	0	0	0	0	0	0	0	0	0	0		
	9:00 PM	0	0	0	0	0	0	0	0	0	0	0	0	0	0	0	0	0	0	0	0	0		
	9:15 PM	0	0	0	0	0	0	0	0	0	0	0	0	0	0	0	0	0	0	0	0	0		
	9:30 PM	0	0	0	0	0	0	0	0	0	0	0	0	0	0	0	0	0	0	0	0	0		
	9:45 PM	0	0	0	0	0	0	0	0	0	0	0	0	0	0	0	0	0	0	0	0	0		
Totals		220	1276	70	0	1566	97	361	99	0	557	100	1290	422	0	1812	469	291	217	0	977	4912		

Peak Hour All Vehicle Volume Summary

Hourly Time Period Start Time		From North (Main St) Right	Thru	Left	U-Tn	Total	From East (Freistadt Rd) Right	Thru	Left	U-Tn	Total	From South (Main St) Right	Thru	Left	U-Tn	Total	From West (Freistadt Rd) Right	Thru	Left	U-Tn	Total	Total Hourly Volume	PHF
AM	7:00 AM	57	381	9	0	447	20	86	13	0	119	11	129	43	0	183	101	42	31	0	174	923	0.85
MD	12:00 PM	0	0	0	0	0	0	0	0	0	0	0	0	0	0	0	0	0	0	0	0	0	
PM	4:30 PM	44	186	23	0	253	23	82	30	0	135	27	426	123	0	576	92	96	59	0	247	1211	0.87

Intersection Traffic Volume Report

Count Basics			*Page 9 of 11*
Start Date:	Tuesday, April 01, 2014	Weekday	Schools in Session
Total Number of Hours Counted: 5		Non-Holiday	No Special Events

15-Minute Heavy Vehicle Data

Heavy Vehicles (Single-Unit Trucks, Buses & Semi-Trucks)

Main St and Freistadt Rd

15-Minute Heavy Vehicle Data

15-Minute Time Period Start Time		↓ From North					← From East					↑ From South					→ From West					15-Min Totals	Hourly Sum
		Main St					Freistadt Rd					Main St					Freistadt Rd						
		Right	Thru	Left	U-Tn	Total	Right	Thru	Left	U-Tn	Total	Right	Thru	Left	U-Tn	Total	Right	Thru	Left	U-Tn	Total		
AM Peak Period	6:00 AM	0	0	0	0	0	0	0	0	0	0	0	0	0	0	0	0	0	0	0	0	0	
	6:15 AM	0	0	0	0	0	0	0	0	0	0	0	0	0	0	0	0	0	0	0	0	0	
	6:30 AM	0	0	0	0	0	0	0	0	0	0	0	0	0	0	0	1	0	0	0	1	1	25
	6:45 AM	0	1	0	0	1	1	0	0	0	1	1	0	1	0	2	0	2	0	0	2	6	32
	7:00 AM	0	0	0	0	0	0	0	0	0	0	0	6	1	0	7	2	2	0	0	4	11	35
	7:15 AM	0	0	0	0	0	0	1	0	0	1	0	2	0	0	2	0	4	0	0	4	7	30
	7:30 AM	0	3	0	0	3	1	0	0	0	1	0	1	0	0	1	2	1	0	0	3	8	29
	7:45 AM	0	3	0	0	3	0	0	0	0	0	2	1	2	0	5	0	1	0	0	1	9	
	8:00 AM	0	2	0	0	2	0	0	1	0	1	0	3	0	0	3	0	0	0	0	0	6	
	8:15 AM	0	2	0	0	2	2	0	1	0	3	0	0	1	0	1	0	0	0	0	0	6	
	8:30 AM	0	0	0	0	0	0	0	0	0	0	0	0	0	0	0	0	0	0	0	0	0	
	8:45 AM	0	0	0	0	0	0	0	0	0	0	0	0	0	0	0	0	0	0	0	0	0	
	9:00 AM	0	0	0	0	0	0	0	0	0	0	0	0	0	0	0	0	0	0	0	0	0	
	9:15 AM	0	0	0	0	0	0	0	0	0	0	0	0	0	0	0	0	0	0	0	0	0	
	9:30 AM	0	0	0	0	0	0	0	0	0	0	0	0	0	0	0	0	0	0	0	0	0	
	9:45 AM	0	0	0	0	0	0	0	0	0	0	0	0	0	0	0	0	0	0	0	0	0	
Midday Peak Period	10:00 AM	0	0	0	0	0	0	0	0	0	0	0	0	0	0	0	0	0	0	0	0	0	
	10:15 AM	0	0	0	0	0	0	0	0	0	0	0	0	0	0	0	0	0	0	0	0	0	
	10:30 AM	0	0	0	0	0	0	0	0	0	0	0	0	0	0	0	0	0	0	0	0	0	
	10:45 AM	0	0	0	0	0	0	0	0	0	0	0	0	0	0	0	0	0	0	0	0	0	
	11:00 AM	0	0	0	0	0	0	0	0	0	0	0	0	0	0	0	0	0	0	0	0	0	
	11:15 AM	0	0	0	0	0	0	0	0	0	0	0	0	0	0	0	0	0	0	0	0	0	
	11:30 AM	0	0	0	0	0	0	0	0	0	0	0	0	0	0	0	0	0	0	0	0	0	
	11:45 AM	0	0	0	0	0	0	0	0	0	0	0	0	0	0	0	0	0	0	0	0	0	
	12:00 PM	0	0	0	0	0	0	0	0	0	0	0	0	0	0	0	0	0	0	0	0	0	
	12:15 PM	0	0	0	0	0	0	0	0	0	0	0	0	0	0	0	0	0	0	0	0	0	
	12:30 PM	0	0	0	0	0	0	0	0	0	0	0	0	0	0	0	0	0	0	0	0	0	
	12:45 PM	0	0	0	0	0	0	0	0	0	0	0	0	0	0	0	0	0	0	0	0	0	
	1:00 PM	0	0	0	0	0	0	0	0	0	0	0	0	0	0	0	0	0	0	0	0	0	
	1:15 PM	0	0	0	0	0	0	0	0	0	0	0	0	0	0	0	0	0	0	0	0	0	
	1:30 PM	0	0	0	0	0	0	0	0	0	0	0	0	0	0	0	0	0	0	0	0	0	
	1:45 PM	0	0	0	0	0	0	0	0	0	0	0	0	0	0	0	0	0	0	0	0	0	
PM Peak Period	2:00 PM	0	0	0	0	0	0	0	0	0	0	0	0	0	0	0	0	0	0	0	0	0	
	2:15 PM	0	0	0	0	0	0	0	0	0	0	0	0	0	0	0	0	0	0	0	0	0	
	2:30 PM	0	0	0	0	0	0	1	0	0	1	0	2	1	0	3	0	0	2	0	2	6	32
	2:45 PM	1	3	0	0	4	1	1	0	0	2	0	2	2	0	4	0	1	0	0	1	11	35
	3:00 PM	0	4	0	0	4	1	4	0	0	5	0	1	0	0	1	1	0	0	0	1	11	29
	3:15 PM	1	2	0	0	3	0	1	0	0	1	0	0	0	0	0	0	0	0	0	0	4	24
	3:30 PM	0	1	0	0	1	0	1	0	0	1	4	2	0	0	6	0	1	0	0	1	9	27
	3:45 PM	1	0	0	0	1	0	1	0	0	1	0	1	0	0	1	0	1	1	0	2	5	23
	4:00 PM	0	1	0	0	1	0	1	0	0	1	0	2	1	0	3	0	1	0	0	1	6	21
	4:15 PM	0	3	0	0	3	0	1	0	0	1	0	2	1	0	3	0	0	0	0	0	7	15
	4:30 PM	1	2	0	0	3	0	0	0	0	0	0	1	0	0	1	1	0	0	0	1	5	10
	4:45 PM	0	0	0	0	0	0	1	0	0	1	1	1	0	0	2	0	0	0	0	0	3	
	5:00 PM	0	0	0	0	0	0	0	0	0	0	0	0	0	0	0	0	0	0	0	0	0	
	5:15 PM	0	0	0	0	0	0	1	0	0	1	0	0	1	0	1	0	0	0	0	0	2	
	5:30 PM	0	0	0	0	0	0	0	0	0	0	0	0	0	0	0	0	0	0	0	0	0	
	5:45 PM	0	0	0	0	0	0	0	0	0	0	0	0	0	0	0	0	0	0	0	0	0	
	6:00 PM	0	0	0	0	0	0	0	0	0	0	0	0	0	0	0	0	0	0	0	0	0	
	6:15 PM	0	0	0	0	0	0	0	0	0	0	0	0	0	0	0	0	0	0	0	0	0	
	6:30 PM	0	0	0	0	0	0	0	0	0	0	0	0	0	0	0	0	0	0	0	0	0	
	6:45 PM	0	0	0	0	0	0	0	0	0	0	0	0	0	0	0	0	0	0	0	0	0	
	7:00 PM	0	0	0	0	0	0	0	0	0	0	0	0	0	0	0	0	0	0	0	0	0	
	7:15 PM	0	0	0	0	0	0	0	0	0	0	0	0	0	0	0	0	0	0	0	0	0	
	7:30 PM	0	0	0	0	0	0	0	0	0	0	0	0	0	0	0	0	0	0	0	0	0	
	7:45 PM	0	0	0	0	0	0	0	0	0	0	0	0	0	0	0	0	0	0	0	0	0	
	8:00 PM	0	0	0	0	0	0	0	0	0	0	0	0	0	0	0	0	0	0	0	0	0	
	8:15 PM	0	0	0	0	0	0	0	0	0	0	0	0	0	0	0	0	0	0	0	0	0	
	8:30 PM	0	0	0	0	0	0	0	0	0	0	0	0	0	0	0	0	0	0	0	0	0	
	8:45 PM	0	0	0	0	0	0	0	0	0	0	0	0	0	0	0	0	0	0	0	0	0	
	9:00 PM	0	0	0	0	0	0	0	0	0	0	0	0	0	0	0	0	0	0	0	0	0	
	9:15 PM	0	0	0	0	0	0	0	0	0	0	0	0	0	0	0	0	0	0	0	0	0	
	9:30 PM	0	0	0	0	0	0	0	0	0	0	0	0	0	0	0	0	0	0	0	0	0	
	9:45 PM	0	0	0	0	0	0	0	0	0	0	0	0	0	0	0	0	0	0	0	0	0	
Totals		4	27	0	0	31	6	14	2	0	22	8	27	11	0	46	7	14	3	0	24	123	

Peak Hour Heavy Vehicle Volume Summary

Hourly Time Period Start Time		↓ From North					← From East					↑ From South					→ From West					Total Hourly Volume
		Main St					Freistadt Rd					Main St					Freistadt Rd					
		Right	Thru	Left	U-Tn	Total	Right	Thru	Left	U-Tn	Total	Right	Thru	Left	U-Tn	Total	Right	Thru	Left	U-Tn	Total	
AM	7:00 AM	0	6	0	0	6	1	1	0	0	2	2	10	3	0	15	4	8	0	0	12	35
MD	12:00 PM	0	0	0	0	0	0	0	0	0	0	0	0	0	0	0	0	0	0	0	0	0
PM	4:30 PM	1	2	0	0	3	0	2	0	0	2	1	2	1	0	4	1	0	0	0	1	10

Intersection Traffic Volume Report

Count Basics	Version 2013.J4.1		Page 1 of 11
Start Date:	Tuesday, April 01, 2014	Weekday	Schools in Session
Total Number of Hours Counted: 5		Non-Holiday	No Special Events

Base Information, Observed (5) Hour and Estimated (24) Hour Volume Summaries

Intersection of: Main St and Grand Ave

Site Information

Municipality	Village of Theinsville		
County	Ozaukee	WisDOT Region	SE
Traffic Control	Partial Stop Control		
Roadway Names		North Direction	↑
North Leg	Main St		
East Leg	Grand Ave		
South Leg	Main St		
West Leg			
Special Considerations			
Schools	In Session		
Holidays	None		
Special Events	None		
Special Pedestrians Observed			
Pre-school children	None		
Elementry school age children	None		
Visually impaired (white cane/helper dog)	None		
Elderly/disabled (except wheelchairs)	None		
Wheelchairs/electric scooters	None		
Other (describe)	None	None	

Count Information

Hrs Counted:	6:30 AM-8:30 AM and 2:30 PM-5:30 PM				
1st Day of Count	Tuesday, April 01, 2014			Weather	
AM Peak Period	Tuesday, April 01, 2014			Clear & Dry	
Midday Peak Period				Clear & Dry	
PM Peak Period	Tuesday, April 01, 2014			Clear & Dry	
Calculated Peak Hours					
AM	7:15-8:15am	MD		PM	4:30-5:30pm
Peak Hours Selected for Analysis					
AM	7:00-8:00am	MD		PM	4:30-5:30pm
Daily/Seasonal Adjustment Group	(2) Urban Arterials & Collectors				
Count Expansion Group	(2) Urban Arterials & Collectors				
Daily/Seasonal Adjustment Factor	0.956	Count Expansion Factor	2.664		
Company Name	TADI			Manual Adj.	1.000
Observers	AM Peak Period	Amy S			
	Midday Peak Period				
	PM Peak Period	Jayne H			
Comments	Version 2011.J4.1; Expansion Factor assumed 6:00AM to 8:00AM and 3:00PM to 6:00PM times on 2012 WisDOT Expansion Factor Spreadsheet.				

Observed 5 Hour Volume Summary

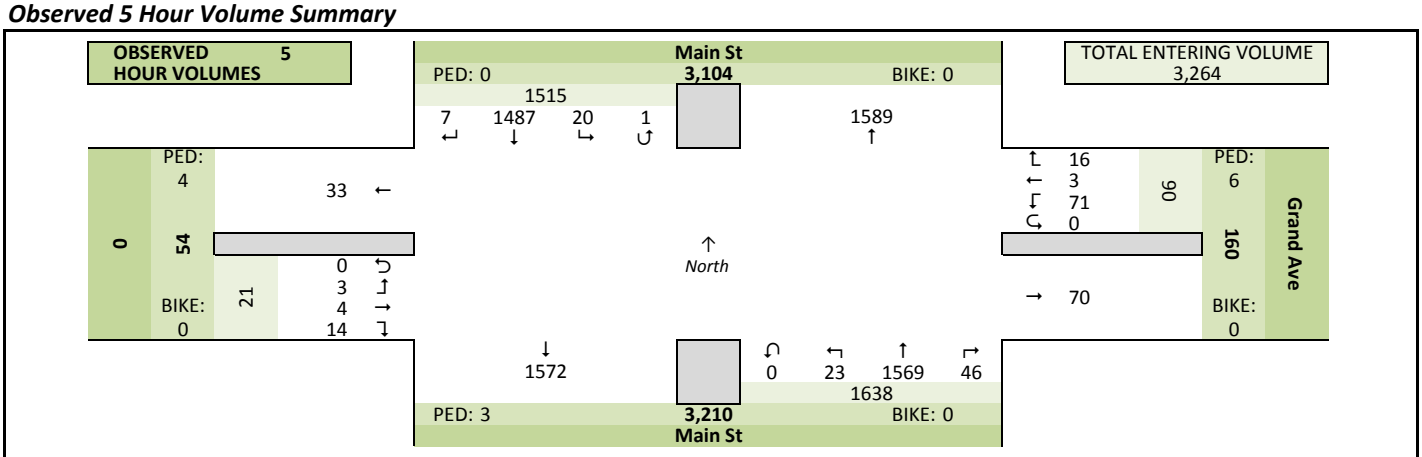

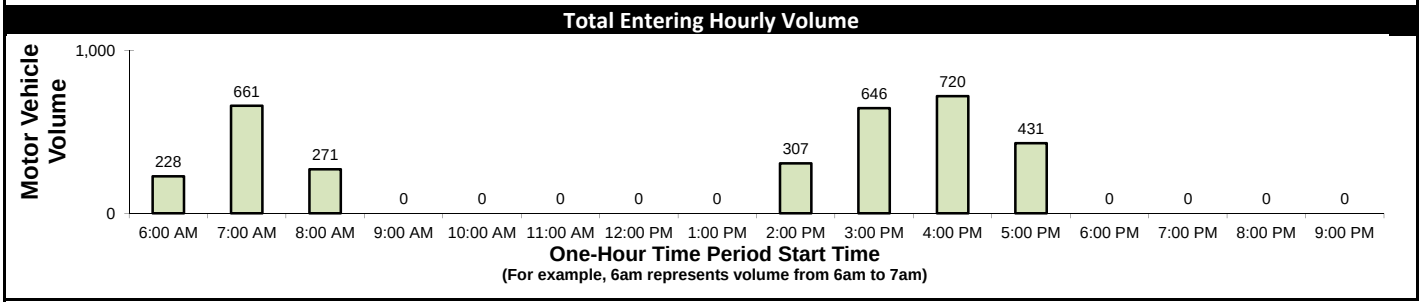

Estimated 24 Hour AADT

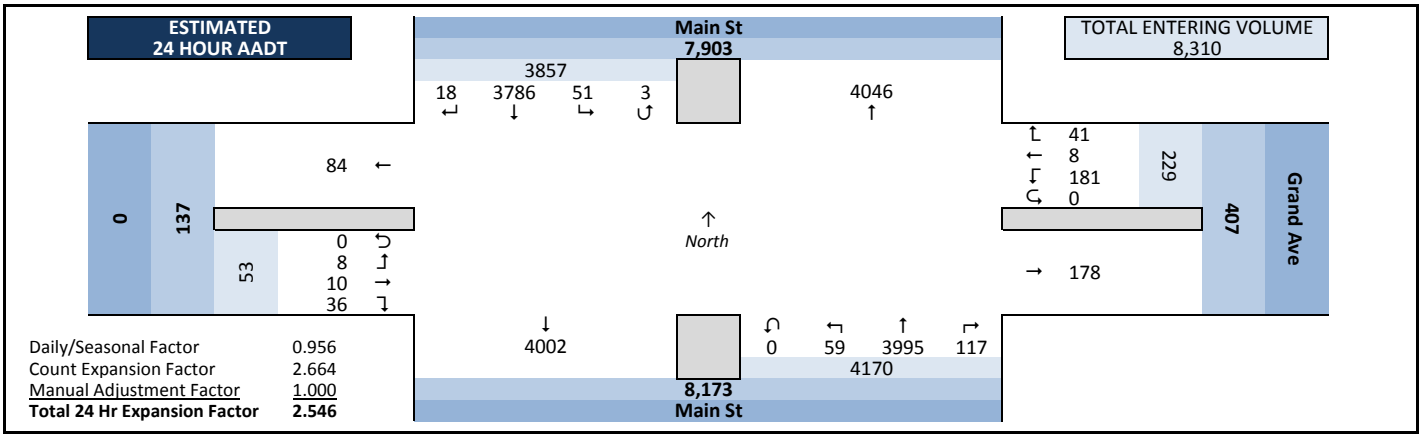

Daily/Seasonal Factor	0.956
Count Expansion Factor	2.664
Manual Adjustment Factor	1.000
Total 24 Hr Expansion Factor	**2.546**

Intersection Traffic Volume Report

Count Basics			Page 2 of 11
Start Date:	Tuesday, April 01, 2014	Weekday	Schools in Session
Total Number of Hours Counted: 5		Non-Holiday	No Special Events

Peak Hour Volume Graphical Summary

All Motor Vehicles

Main St and Grand Ave

AM Peak Hour Summary

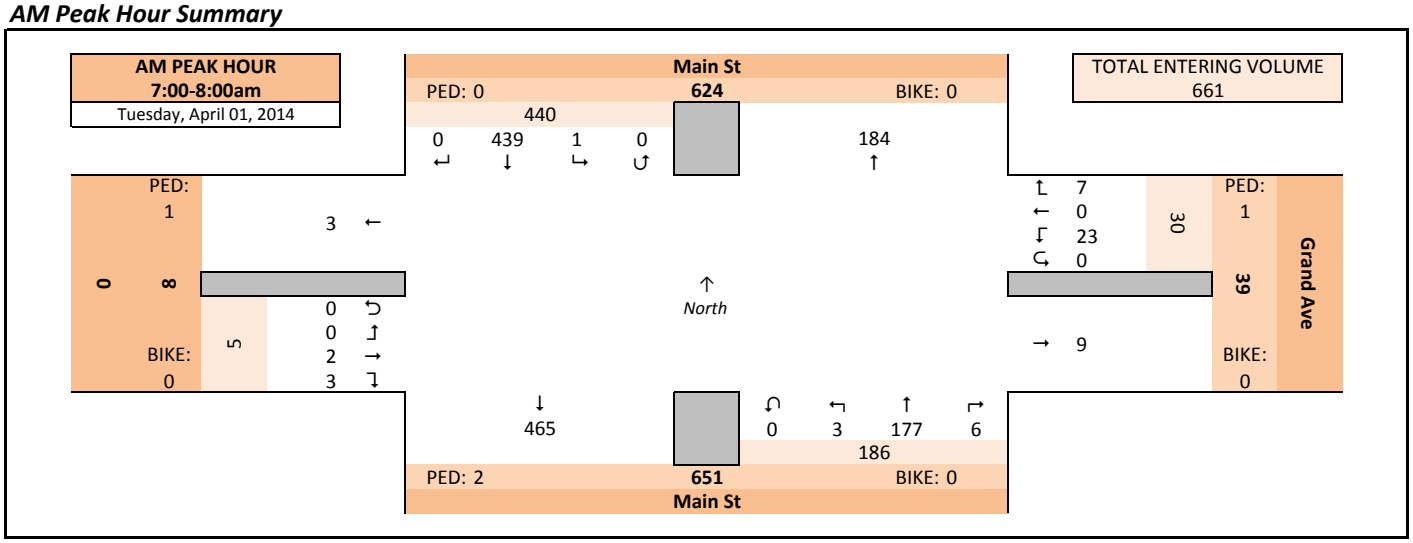

Midday (MD) Peak Hour Summary

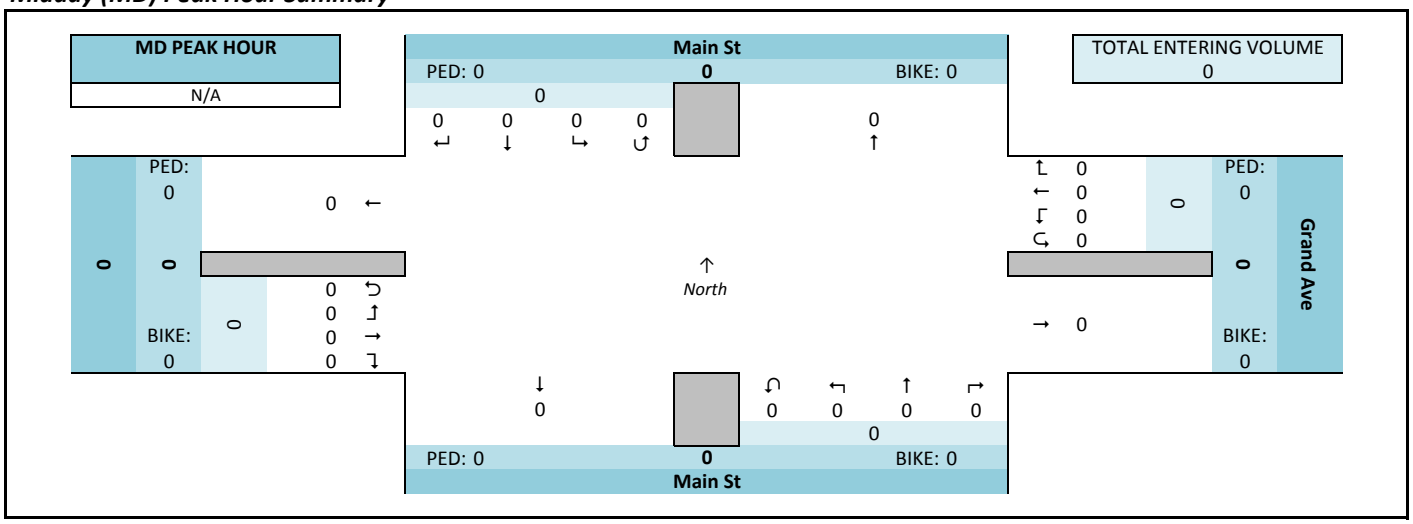

PM Peak Hour Summary

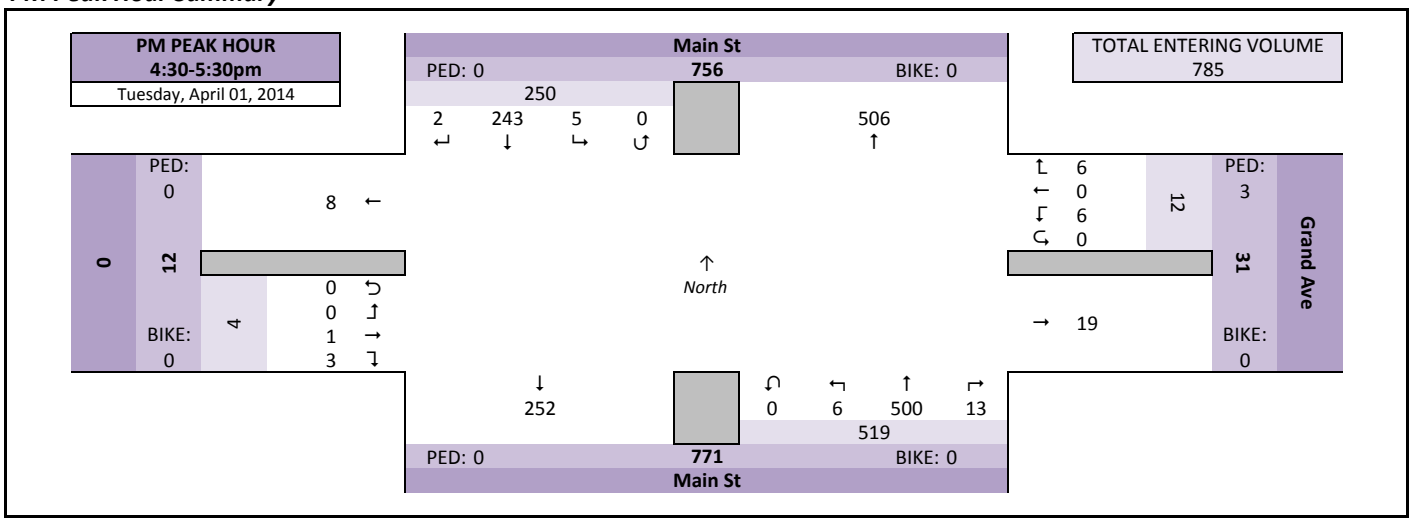

Intersection Traffic Volume Report

Count Basics			Page 3 of 11
Start Date:	Tuesday, April 01, 2014	Weekday	Schools in Session
Total Number of Hours Counted: 5		Non-Holiday	No Special Events

Peak Hour Volume Summary

Main St and Grand Ave

All Motor Vehicles

Peak Hour Volumes, Truck Percentages, and PHFs

Tuesday, April 01, 2014		From North					From East					From South					From West					
	AM Peak Hour	Main St					Grand Ave					Main St					0					
	Start Time	Right	Thru	Left	U-Tn	Total	Right	Thru	Left	U-Tn	Total	Right	Thru	Left	U-Tn	Total	Right	Thru	Left	U-Tn	Total	Totals
AM Peak Hour	7:00 AM	0	85	0	0	85	2	0	6	0	8	0	31	0	0	31	1	0	0	0	1	125
	7:15 AM	0	106	0	0	106	1	0	4	0	5	2	42	1	0	45	0	0	0	0	0	156
	7:30 AM	0	140	1	0	141	1	0	11	0	12	2	51	0	0	53	1	0	0	0	1	207
	7:45 AM	0	108	0	0	108	3	0	2	0	5	2	53	2	0	57	1	2	0	0	3	173
	Peak Hour Volume	0	439	1	0	440	7	0	23	0	30	6	177	3	0	186	3	2	0	0	5	661
	Rounded Hourly Volume	0	440	0	0	440	5	0	25	0	30	5	175	5	0	185	5	0	0	0	5	660
	% Single Unit Trucks	0.0	1.1	0.0	0.0	1.1	0.0	0.0	0.0	0.0	0.0	16.7	2.8	33.3	0.0	3.8	0.0	50.0	0.0	0.0	20.0	2.0
	% Heavy Trucks	0.0	0.2	0.0	0.0	0.2	0.0	0.0	0.0	0.0	0.0	0.0	0.6	0.0	0.0	0.5	0.0	0.0	0.0	0.0	0.0	0.3
	% Trucks (Total)	0.0	1.4	0.0	0.0	1.4	0.0	0.0	0.0	0.0	0.0	16.7	3.4	33.3	0.0	4.3	0.0	50.0	0.0	0.0	20.0	2.3
	Peak Hour Factor (PHF)	0.00	0.78	0.25	0.00	0.78	0.58	0.00	0.52	0.00	0.62	0.75	0.83	0.37	0.00	0.82	0.75	0.25	0.00	0.00	0.42	0.80

N/A		From North					From East					From South					From West					
	MD Peak Hour	Main St					Grand Ave					Main St					0					
	Start Time	Right	Thru	Left	U-Tn	Total	Right	Thru	Left	U-Tn	Total	Right	Thru	Left	U-Tn	Total	Right	Thru	Left	U-Tn	Total	Totals
Midday (MD) Peak Hour	12:00 PM	0	0	0	0	0	0	0	0	0	0	0	0	0	0	0	0	0	0	0	0	0
	12:15 PM	0	0	0	0	0	0	0	0	0	0	0	0	0	0	0	0	0	0	0	0	0
	12:30 PM	0	0	0	0	0	0	0	0	0	0	0	0	0	0	0	0	0	0	0	0	0
	12:45 PM	0	0	0	0	0	0	0	0	0	0	0	0	0	0	0	0	0	0	0	0	0
	Peak Hour Volume	0	0	0	0	0	0	0	0	0	0	0	0	0	0	0	0	0	0	0	0	0
	Rounded Hourly Volume	0	0	0	0	0	0	0	0	0	0	0	0	0	0	0	0	0	0	0	0	0
	% Single Unit Trucks	0.0	0.0	0.0	0.0	0.0	0.0	0.0	0.0	0.0	0.0	0.0	0.0	0.0	0.0	0.0	0.0	0.0	0.0	0.0	0.0	0.0
	% Heavy Trucks	0.0	0.0	0.0	0.0	0.0	0.0	0.0	0.0	0.0	0.0	0.0	0.0	0.0	0.0	0.0	0.0	0.0	0.0	0.0	0.0	0.0
	% Trucks (Total)	0.0	0.0	0.0	0.0	0.0	0.0	0.0	0.0	0.0	0.0	0.0	0.0	0.0	0.0	0.0	0.0	0.0	0.0	0.0	0.0	0.0
	Peak Hour Factor (PHF)	0.00	0.00	0.00	0.00	0.00	0.00	0.00	0.00	0.00	0.00	0.00	0.00	0.00	0.00	0.00	0.00	0.00	0.00	0.00	0.00	0.00

Tuesday, April 01, 2014		From North					From East					From South					From West					
	PM Peak Hour	Main St					Grand Ave					Main St					0					
	Start Time	Right	Thru	Left	U-Tn	Total	Right	Thru	Left	U-Tn	Total	Right	Thru	Left	U-Tn	Total	Right	Thru	Left	U-Tn	Total	Totals
PM Peak Hour	4:30 PM	0	50	2	0	52	1	0	1	0	2	4	95	1	0	100	1	1	0	0	2	156
	4:45 PM	0	69	0	0	69	3	0	1	0	4	5	118	1	0	124	1	0	0	0	1	198
	5:00 PM	0	70	1	0	71	2	0	2	0	4	2	142	1	0	145	1	0	0	0	1	221
	5:15 PM	2	54	2	0	58	0	0	2	0	2	2	145	3	0	150	0	0	0	0	0	210
	Peak Hour Volume	2	243	5	0	250	6	0	6	0	12	13	500	6	0	519	3	1	0	0	4	785
	Rounded Hourly Volume	0	245	5	0	250	5	0	5	0	10	15	500	5	0	520	5	0	0	0	5	785
	% Single Unit Trucks	0.0	1.2	0.0	0.0	1.2	0.0	0.0	0.0	0.0	0.0	0.0	0.6	0.0	0.0	0.6	0.0	0.0	0.0	0.0	0.0	0.8
	% Heavy Trucks	0.0	0.0	0.0	0.0	0.0	0.0	0.0	0.0	0.0	0.0	0.0	0.0	0.0	0.0	0.0	0.0	0.0	0.0	0.0	0.0	0.0
	% Trucks (Total)	0.0	1.2	0.0	0.0	1.2	0.0	0.0	0.0	0.0	0.0	0.0	0.6	0.0	0.0	0.6	0.0	0.0	0.0	0.0	0.0	0.8
	Peak Hour Factor (PHF)	0.25	0.87	0.62	0.00	0.88	0.50	0.00	0.75	0.00	0.75	0.65	0.86	0.50	0.00	0.86	0.75	0.25	0.00	0.00	0.50	0.89

Peak Hour Pedestrian and Bicyclist Volumes

Pedestrians and Bicyclists		Crossing North Approach			Crossing East Approach			Crossing South Approach			Crossing West Approach			Total Ped & Bike Volume
		Main St			Grand Ave			Main St			0			
	15-Minute Start Time	Pedestrian	Bicyclist	Total	Pedestrian	Bicyclist	Total	Pedestrian	Bicyclist	Total	Pedestrian	Bicyclist	Total	
AM	7:00 AM	0	0	0	0	0	0	2	0	2	1	0	1	3
	7:15 AM	0	0	0	0	0	0	0	0	0	0	0	0	0
	7:30 AM	0	0	0	1	0	1	0	0	0	0	0	0	1
	7:45 AM	0	0	0	0	0	0	0	0	0	0	0	0	0
	Total	0	0	0	1	0	1	2	0	2	1	0	1	4
MD	12:00 PM	0	0	0	0	0	0	0	0	0	0	0	0	0
	12:15 PM	0	0	0	0	0	0	0	0	0	0	0	0	0
	12:30 PM	0	0	0	0	0	0	0	0	0	0	0	0	0
	12:45 PM	0	0	0	0	0	0	0	0	0	0	0	0	0
	Total	0	0	0	0	0	0	0	0	0	0	0	0	0
PM	4:30 PM	0	0	0	2	0	2	0	0	0	0	0	0	2
	4:45 PM	0	0	0	1	0	1	0	0	0	0	0	0	1
	5:00 PM	0	0	0	0	0	0	0	0	0	0	0	0	0
	5:15 PM	0	0	0	0	0	0	0	0	0	0	0	0	0
	Total	0	0	0	3	0	3	0	0	0	0	0	0	3

Intersection Traffic Volume Report

Count Basics		*Page 5 of 11*
Start Date: Tuesday, April 01, 2014	Weekday	Schools in Session
Total Number of Hours Counted: 5	Non-Holiday	No Special Events

15-Minute Motor Vehicle Data

All Motor Vehicles

Main St and Grand Ave

15-Minute Motor Vehicle Data

15-Minute Time Period Start Time		↓ From North					← From East					↑ From South					→ From West					15-Min Totals	Hourly Sum	PHF
		Main St					Grand Ave					Main St					0							
		Right	Thru	Left	U-Tn	Total	Right	Thru	Left	U-Tn	Total	Right	Thru	Left	U-Tn	Total	Right	Thru	Left	U-Tn	Total			
AM Peak Period	6:00 AM	0	0	0	0	0	0	0	0	0	0	0	0	0	0	0	0	0	0	0	0	0		
	6:15 AM	0	0	0	0	0	0	0	0	0	0	0	0	0	0	0	0	0	0	0	0	0		
	6:30 AM	0	74	0	0	74	0	0	8	0	8	0	24	0	0	24	0	0	0	0	0	106	509	0.82
	6:45 AM	0	83	0	0	83	0	0	4	0	4	1	33	0	0	34	1	0	0	0	1	122	610	0.74
	7:00 AM	0	85	0	0	85	2	0	6	0	8	0	31	0	0	31	1	0	0	0	1	125	661	0.80
	7:15 AM	0	106	0	0	106	1	0	4	0	5	2	42	1	0	45	0	0	0	0	0	156	669	0.81
	7:30 AM	0	140	1	0	141	1	0	11	0	12	2	51	0	0	53	1	0	0	0	1	207	651	0.79
	7:45 AM	0	108	0	0	108	3	0	2	0	5	2	53	2	0	57	1	2	0	0	3	173		
	8:00 AM	0	83	1	1	85	1	1	5	0	7	1	38	0	0	39	2	0	0	0	2	133		
	8:15 AM	0	81	1	0	82	0	0	5	0	5	1	48	1	0	50	0	0	1	0	1	138		
	8:30 AM	0	0	0	0	0	0	0	0	0	0	0	0	0	0	0	0	0	0	0	0	0		
	8:45 AM	0	0	0	0	0	0	0	0	0	0	0	0	0	0	0	0	0	0	0	0	0		
	9:00 AM	0	0	0	0	0	0	0	0	0	0	0	0	0	0	0	0	0	0	0	0	0		
	9:15 AM	0	0	0	0	0	0	0	0	0	0	0	0	0	0	0	0	0	0	0	0	0		
	9:30 AM	0	0	0	0	0	0	0	0	0	0	0	0	0	0	0	0	0	0	0	0	0		
	9:45 AM	0	0	0	0	0	0	0	0	0	0	0	0	0	0	0	0	0	0	0	0	0		
Midday Peak Period	10:00 AM	0	0	0	0	0	0	0	0	0	0	0	0	0	0	0	0	0	0	0	0	0		
	10:15 AM	0	0	0	0	0	0	0	0	0	0	0	0	0	0	0	0	0	0	0	0	0		
	10:30 AM	0	0	0	0	0	0	0	0	0	0	0	0	0	0	0	0	0	0	0	0	0		
	10:45 AM	0	0	0	0	0	0	0	0	0	0	0	0	0	0	0	0	0	0	0	0	0		
	11:00 AM	0	0	0	0	0	0	0	0	0	0	0	0	0	0	0	0	0	0	0	0	0		
	11:15 AM	0	0	0	0	0	0	0	0	0	0	0	0	0	0	0	0	0	0	0	0	0		
	11:30 AM	0	0	0	0	0	0	0	0	0	0	0	0	0	0	0	0	0	0	0	0	0		
	11:45 AM	0	0	0	0	0	0	0	0	0	0	0	0	0	0	0	0	0	0	0	0	0		
	12:00 PM	0	0	0	0	0	0	0	0	0	0	0	0	0	0	0	0	0	0	0	0	0		
	12:15 PM	0	0	0	0	0	0	0	0	0	0	0	0	0	0	0	0	0	0	0	0	0		
	12:30 PM	0	0	0	0	0	0	0	0	0	0	0	0	0	0	0	0	0	0	0	0	0		
	12:45 PM	0	0	0	0	0	0	0	0	0	0	0	0	0	0	0	0	0	0	0	0	0		
	1:00 PM	0	0	0	0	0	0	0	0	0	0	0	0	0	0	0	0	0	0	0	0	0		
	1:15 PM	0	0	0	0	0	0	0	0	0	0	0	0	0	0	0	0	0	0	0	0	0		
	1:30 PM	0	0	0	0	0	0	0	0	0	0	0	0	0	0	0	0	0	0	0	0	0		
	1:45 PM	0	0	0	0	0	0	0	0	0	0	0	0	0	0	0	0	0	0	0	0	0		
PM Peak Period	2:00 PM	0	0	0	0	0	0	0	0	0	0	0	0	0	0	0	0	0	0	0	0	0		
	2:15 PM	0	0	0	0	0	0	0	0	0	0	0	0	0	0	0	0	0	0	0	0	0		
	2:30 PM	0	45	2	0	47	0	0	1	0	1	2	83	1	0	86	0	0	0	0	0	134	623	0.90
	2:45 PM	1	63	2	0	66	1	0	4	0	5	6	94	0	0	100	1	0	1	0	2	173	649	0.94
	3:00 PM	1	72	1	0	74	0	0	3	0	3	2	69	1	0	72	0	0	0	0	0	149	646	0.95
	3:15 PM	0	57	1	0	58	0	0	0	0	0	0	105	2	0	107	2	0	0	0	2	167	668	0.98
	3:30 PM	1	58	2	0	61	0	1	4	0	5	1	91	1	0	93	0	0	1	0	1	160	696	0.89
	3:45 PM	0	59	0	0	59	1	1	1	0	3	7	96	5	0	108	0	0	0	0	0	170	692	0.89
	4:00 PM	0	63	1	0	64	0	0	2	0	2	4	97	1	0	102	2	1	0	0	3	171	720	0.91
	4:15 PM	2	67	3	0	72	0	0	5	0	5	2	114	2	0	118	0	0	0	0	0	195	770	0.87
	4:30 PM	0	50	2	0	52	1	0	1	0	2	4	95	1	0	100	1	1	0	0	2	156	785	0.89
	4:45 PM	0	69	0	0	69	3	0	1	0	4	5	118	1	0	124	1	0	0	0	1	198		
	5:00 PM	0	70	1	0	71	2	0	2	0	4	2	142	1	0	145	1	0	0	0	1	221		
	5:15 PM	2	54	2	0	58	0	0	2	0	2	2	145	3	0	150	0	0	0	0	0	210		
	5:30 PM	0	0	0	0	0	0	0	0	0	0	0	0	0	0	0	0	0	0	0	0	0		
	5:45 PM	0	0	0	0	0	0	0	0	0	0	0	0	0	0	0	0	0	0	0	0	0		
	6:00 PM	0	0	0	0	0	0	0	0	0	0	0	0	0	0	0	0	0	0	0	0	0		
	6:15 PM	0	0	0	0	0	0	0	0	0	0	0	0	0	0	0	0	0	0	0	0	0		
	6:30 PM	0	0	0	0	0	0	0	0	0	0	0	0	0	0	0	0	0	0	0	0	0		
	6:45 PM	0	0	0	0	0	0	0	0	0	0	0	0	0	0	0	0	0	0	0	0	0		
	7:00 PM	0	0	0	0	0	0	0	0	0	0	0	0	0	0	0	0	0	0	0	0	0		
	7:15 PM	0	0	0	0	0	0	0	0	0	0	0	0	0	0	0	0	0	0	0	0	0		
	7:30 PM	0	0	0	0	0	0	0	0	0	0	0	0	0	0	0	0	0	0	0	0	0		
	7:45 PM	0	0	0	0	0	0	0	0	0	0	0	0	0	0	0	0	0	0	0	0	0		
	8:00 PM	0	0	0	0	0	0	0	0	0	0	0	0	0	0	0	0	0	0	0	0	0		
	8:15 PM	0	0	0	0	0	0	0	0	0	0	0	0	0	0	0	0	0	0	0	0	0		
	8:30 PM	0	0	0	0	0	0	0	0	0	0	0	0	0	0	0	0	0	0	0	0	0		
	8:45 PM	0	0	0	0	0	0	0	0	0	0	0	0	0	0	0	0	0	0	0	0	0		
	9:00 PM	0	0	0	0	0	0	0	0	0	0	0	0	0	0	0	0	0	0	0	0	0		
	9:15 PM	0	0	0	0	0	0	0	0	0	0	0	0	0	0	0	0	0	0	0	0	0		
	9:30 PM	0	0	0	0	0	0	0	0	0	0	0	0	0	0	0	0	0	0	0	0	0		
	9:45 PM	0	0	0	0	0	0	0	0	0	0	0	0	0	0	0	0	0	0	0	0	0		
Totals		7	1487	20	1	1515	16	3	71	0	90	46	1569	23	0	1638	14	4	3	0	21	3264		

Peak Hour All Vehicle Volume Summary

Hourly Time Period Start Time		↓ From North					← From East					↑ From South					→ From West					Total Hourly Volume	PHF
		Main St					Grand Ave					Main St					0						
		Right	Thru	Left	U-Tn	Total	Right	Thru	Left	U-Tn	Total	Right	Thru	Left	U-Tn	Total	Right	Thru	Left	U-Tn	Total		
AM	7:00 AM	0	439	1	0	440	7	0	23	0	30	6	177	3	0	186	3	2	0	0	5	661	0.80
MD	12:00 PM	0	0	0	0	0	0	0	0	0	0	0	0	0	0	0	0	0	0	0	0	0	
PM	4:30 PM	2	243	5	0	250	6	0	6	0	12	13	500	6	0	519	3	1	0	0	4	785	0.89

Intersection Traffic Volume Report

Count Basics			*Page 9 of 11*
Start Date:	Tuesday, April 01, 2014	Weekday	Schools in Session
Total Number of Hours Counted: 5		Non-Holiday	No Special Events

15-Minute Heavy Vehicle Data

Heavy Vehicles (Single-Unit Trucks, Buses & Semi-Trucks)

Main St and Grand Ave

15-Minute Heavy Vehicle Data

15-Minute Time Period Start Time		From North (Main St) Right	Thru	Left	U-Tn	Total	From East (Grand Ave) Right	Thru	Left	U-Tn	Total	From South (Main St) Right	Thru	Left	U-Tn	Total	From West (0) Right	Thru	Left	U-Tn	Total	15-Min Totals	Hourly Sum
AM Peak Period	6:00 AM	0	0	0	0	0	0	0	0	0	0	0	0	0	0	0	0	0	0	0	0	0	
	6:15 AM	0	0	0	0	0	0	0	0	0	0	0	0	0	0	0	0	0	0	0	0	0	
	6:30 AM	0	1	0	0	1	0	0	0	0	0	0	0	0	0	0	0	0	0	0	1	10
	6:45 AM	0	3	0	0	3	0	0	0	0	0	0	2	0	0	2	0	0	0	0	5	12
	7:00 AM	0	0	0	0	0	0	0	0	0	0	0	2	0	0	2	0	0	0	0	2	15
	7:15 AM	0	1	0	0	1	0	0	0	0	0	1	0	0	0	1	0	0	0	0	2	15
	7:30 AM	0	3	0	0	3	0	0	0	0	0	0	0	0	0	0	0	0	0	0	3	18
	7:45 AM	0	2	0	0	2	0	0	0	0	0	0	4	1	0	5	0	1	0	0	1	8	
	8:00 AM	0	0	0	0	0	0	0	0	0	0	0	2	0	0	2	0	0	0	0	0	2	
	8:15 AM	0	1	0	0	1	0	0	0	0	0	1	3	0	0	4	0	0	0	0	0	5	
	8:30 AM	0	0	0	0	0	0	0	0	0	0	0	0	0	0	0	0	0	0	0	0	0	
	8:45 AM	0	0	0	0	0	0	0	0	0	0	0	0	0	0	0	0	0	0	0	0	0	
	9:00 AM	0	0	0	0	0	0	0	0	0	0	0	0	0	0	0	0	0	0	0	0	0	
	9:15 AM	0	0	0	0	0	0	0	0	0	0	0	0	0	0	0	0	0	0	0	0	0	
	9:30 AM	0	0	0	0	0	0	0	0	0	0	0	0	0	0	0	0	0	0	0	0	0	
	9:45 AM	0	0	0	0	0	0	0	0	0	0	0	0	0	0	0	0	0	0	0	0	0	
Midday Peak Period	10:00 AM	0	0	0	0	0	0	0	0	0	0	0	0	0	0	0	0	0	0	0	0	0	
	10:15 AM	0	0	0	0	0	0	0	0	0	0	0	0	0	0	0	0	0	0	0	0	0	
	10:30 AM	0	0	0	0	0	0	0	0	0	0	0	0	0	0	0	0	0	0	0	0	0	
	10:45 AM	0	0	0	0	0	0	0	0	0	0	0	0	0	0	0	0	0	0	0	0	0	
	11:00 AM	0	0	0	0	0	0	0	0	0	0	0	0	0	0	0	0	0	0	0	0	0	
	11:15 AM	0	0	0	0	0	0	0	0	0	0	0	0	0	0	0	0	0	0	0	0	0	
	11:30 AM	0	0	0	0	0	0	0	0	0	0	0	0	0	0	0	0	0	0	0	0	0	
	11:45 AM	0	0	0	0	0	0	0	0	0	0	0	0	0	0	0	0	0	0	0	0	0	
	12:00 PM	0	0	0	0	0	0	0	0	0	0	0	0	0	0	0	0	0	0	0	0	0	
	12:15 PM	0	0	0	0	0	0	0	0	0	0	0	0	0	0	0	0	0	0	0	0	0	
	12:30 PM	0	0	0	0	0	0	0	0	0	0	0	0	0	0	0	0	0	0	0	0	0	
	12:45 PM	0	0	0	0	0	0	0	0	0	0	0	0	0	0	0	0	0	0	0	0	0	
	1:00 PM	0	0	0	0	0	0	0	0	0	0	0	0	0	0	0	0	0	0	0	0	0	
	1:15 PM	0	0	0	0	0	0	0	0	0	0	0	0	0	0	0	0	0	0	0	0	0	
	1:30 PM	0	0	0	0	0	0	0	0	0	0	0	0	0	0	0	0	0	0	0	0	0	
	1:45 PM	0	0	0	0	0	0	0	0	0	0	0	0	0	0	0	0	0	0	0	0	0	
PM Peak Period	2:00 PM	0	0	0	0	0	0	0	0	0	0	0	0	0	0	0	0	0	0	0	0	0	
	2:15 PM	0	0	0	0	0	0	0	0	0	0	0	0	0	0	0	0	0	0	0	0	0	
	2:30 PM	0	0	0	0	0	0	0	0	0	0	1	3	0	0	4	0	0	0	0	0	4	20
	2:45 PM	0	4	0	0	4	1	0	0	0	1	0	2	0	0	2	0	0	0	0	0	7	19
	3:00 PM	0	4	0	0	4	0	0	0	0	0	0	2	0	0	2	0	0	0	0	0	6	17
	3:15 PM	0	3	0	0	3	0	0	0	0	0	0	0	0	0	0	0	0	0	0	0	3	16
	3:30 PM	0	1	1	0	2	0	0	0	0	0	0	1	0	0	1	0	0	0	0	0	3	18
	3:45 PM	0	1	0	0	1	0	0	0	0	0	0	4	0	0	4	0	0	0	0	0	5	20
	4:00 PM	0	1	0	0	1	0	0	0	0	0	0	4	0	0	4	0	0	0	0	0	5	16
	4:15 PM	0	3	1	0	4	0	0	0	0	0	0	1	0	0	1	0	0	0	0	0	5	11
	4:30 PM	0	3	0	0	3	0	0	0	0	0	0	2	0	0	2	0	0	0	0	0	5	6
	4:45 PM	0	0	0	0	0	0	0	0	0	0	0	1	0	0	1	0	0	0	0	0	1	
	5:00 PM	0	0	0	0	0	0	0	0	0	0	0	0	0	0	0	0	0	0	0	0	0	
	5:15 PM	0	0	0	0	0	0	0	0	0	0	0	0	0	0	0	0	0	0	0	0	0	
	5:30 PM	0	0	0	0	0	0	0	0	0	0	0	0	0	0	0	0	0	0	0	0	0	
	5:45 PM	0	0	0	0	0	0	0	0	0	0	0	0	0	0	0	0	0	0	0	0	0	
	6:00 PM	0	0	0	0	0	0	0	0	0	0	0	0	0	0	0	0	0	0	0	0	0	
	6:15 PM	0	0	0	0	0	0	0	0	0	0	0	0	0	0	0	0	0	0	0	0	0	
	6:30 PM	0	0	0	0	0	0	0	0	0	0	0	0	0	0	0	0	0	0	0	0	0	
	6:45 PM	0	0	0	0	0	0	0	0	0	0	0	0	0	0	0	0	0	0	0	0	0	
	7:00 PM	0	0	0	0	0	0	0	0	0	0	0	0	0	0	0	0	0	0	0	0	0	
	7:15 PM	0	0	0	0	0	0	0	0	0	0	0	0	0	0	0	0	0	0	0	0	0	
	7:30 PM	0	0	0	0	0	0	0	0	0	0	0	0	0	0	0	0	0	0	0	0	0	
	7:45 PM	0	0	0	0	0	0	0	0	0	0	0	0	0	0	0	0	0	0	0	0	0	
	8:00 PM	0	0	0	0	0	0	0	0	0	0	0	0	0	0	0	0	0	0	0	0	0	
	8:15 PM	0	0	0	0	0	0	0	0	0	0	0	0	0	0	0	0	0	0	0	0	0	
	8:30 PM	0	0	0	0	0	0	0	0	0	0	0	0	0	0	0	0	0	0	0	0	0	
	8:45 PM	0	0	0	0	0	0	0	0	0	0	0	0	0	0	0	0	0	0	0	0	0	
	9:00 PM	0	0	0	0	0	0	0	0	0	0	0	0	0	0	0	0	0	0	0	0	0	
	9:15 PM	0	0	0	0	0	0	0	0	0	0	0	0	0	0	0	0	0	0	0	0	0	
	9:30 PM	0	0	0	0	0	0	0	0	0	0	0	0	0	0	0	0	0	0	0	0	0	
	9:45 PM	0	0	0	0	0	0	0	0	0	0	0	0	0	0	0	0	0	0	0	0	0	
Totals		0	31	2	0	33	1	0	0	0	1	3	33	1	0	37	0	1	0	0	1	72	

Peak Hour Heavy Vehicle Volume Summary

Hourly Time Period Start Time		From North (Main St) Right	Thru	Left	U-Tn	Total	From East (Grand Ave) Right	Thru	Left	U-Tn	Total	From South (Main St) Right	Thru	Left	U-Tn	Total	From West (0) Right	Thru	Left	U-Tn	Total	Total Hourly Volume
AM	7:00 AM	0	6	0	0	6	0	0	0	0	0	1	6	1	0	8	0	1	0	0	1	15
MD	12:00 PM	0	0	0	0	0	0	0	0	0	0	0	0	0	0	0	0	0	0	0	0	0
PM	4:30 PM	0	3	0	0	3	0	0	0	0	0	0	3	0	0	3	0	0	0	0	0	6

Intersection Traffic Volume Report

Count Basics	Version 2013.J4.1		Page 1 of 11
Start Date:	Monday, March 31, 2014	Weekday	Schools in Session
Total Number of Hours Counted: 5		Non-Holiday	No Special Events

Base Information, Observed (5) Hour and Estimated (24) Hour Volume Summaries

Intersection of: Main St and Heidel Rd

Site Information

Municipality	Village of Theinsville		
County	Ozaukee	WisDOT Region	SE
Traffic Control	Partial Stop Control		
Roadway Names		North Direction	↑
North Leg	Main St		
East Leg	Heidel Rd		
South Leg	Main St		
West Leg			
Special Considerations			
Schools	In Session		
Holidays	None		
Special Events	None		
Special Pedestrians Observed			
Pre-school children	None		
Elementry school age children	None		
Visually impaired (white cane/helper dog)	None		
Elderly/disabled (except wheelchairs)	None		
Wheelchairs/electric scooters	None		
Other (describe)	None	None	

Count Information

Hrs Counted:	6:30 AM-8:30 AM and 2:30 PM-5:30 PM				
1st Day of Count	Monday, March 31, 2014			Weather	
AM Peak Period	Tuesday, April 01, 2014			Clear & Dry	
Midday Peak Period				Clear & Dry	
PM Peak Period	Monday, March 31, 2014			Clear & Dry	
Calculated Peak Hours					
AM	7:15-8:15am	MD		PM	4:30-5:30pm
Peak Hours Selected for Analysis					
AM	7:00-8:00am	MD		PM	4:30-5:30pm
Daily/Seasonal Adjustment Group	(2) Urban Arterials & Collectors				
Count Expansion Group	(2) Urban Arterials & Collectors				
Daily/Seasonal Adjustment Factor	0.993	Count Expansion Factor	2.664		
Company Name	TADI			Manual Adj.	1.000
Observers	AM Peak Period	Jayne H			
	Midday Peak Period				
	PM Peak Period	Amy S			
Comments	Version 2011.J4.1; Expansion Factor assumed 6:00AM to 8:00AM and 3:00PM to 6:00PM times on 2012 WisDOT Expansion Factor Spreadsheet.				

Observed 5 Hour Volume Summary

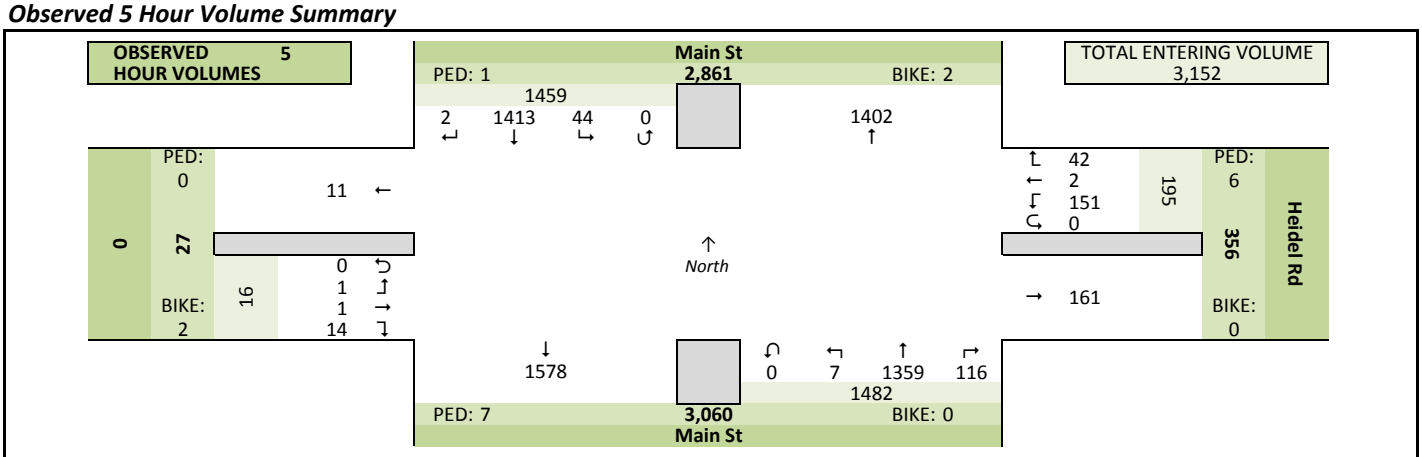

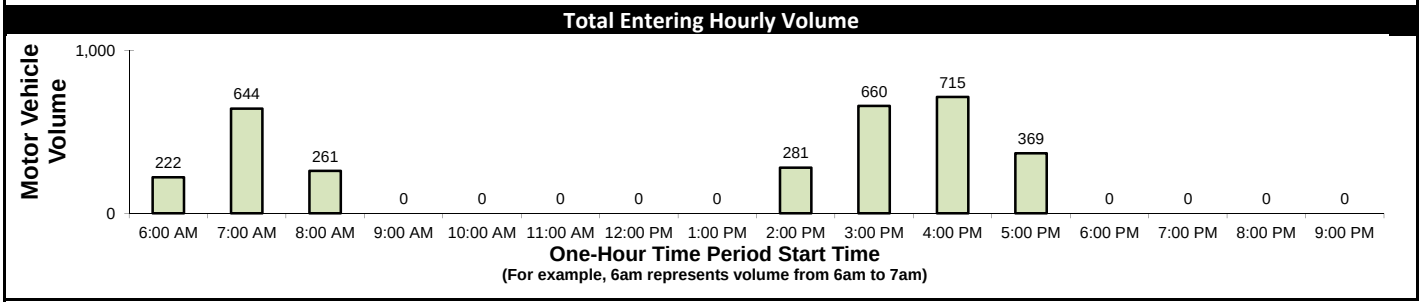

Estimated 24 Hour AADT

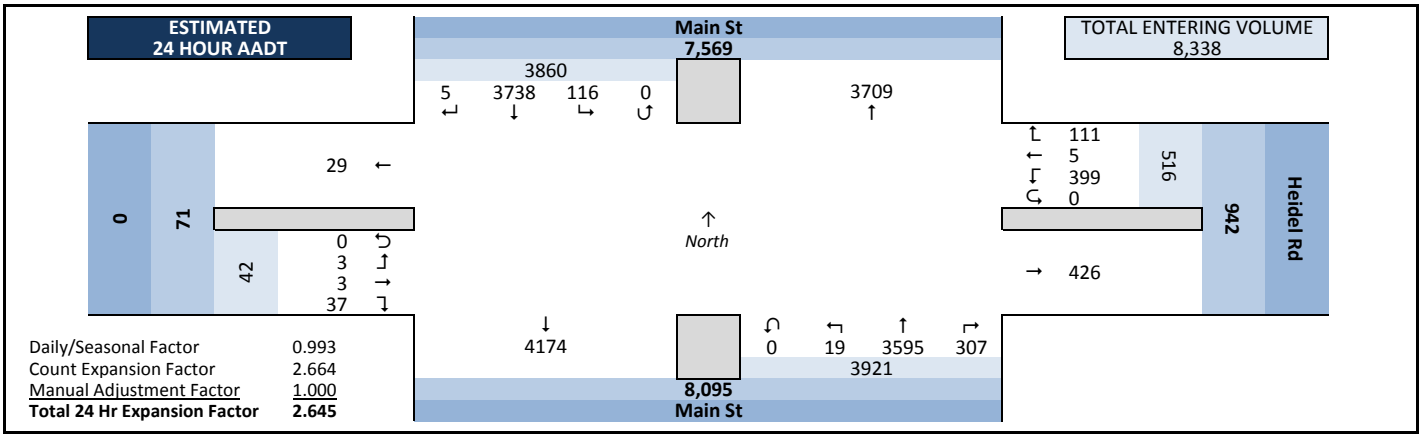

Daily/Seasonal Factor	0.993
Count Expansion Factor	2.664
Manual Adjustment Factor	1.000
Total 24 Hr Expansion Factor	**2.645**

Intersection Traffic Volume Report

Count Basics			Page 2 of 11
Start Date:	Monday, March 31, 2014	Weekday	Schools in Session
Total Number of Hours Counted: 5		Non-Holiday	No Special Events

Peak Hour Volume Graphical Summary

All Motor Vehicles

Main St and Heidel Rd

AM Peak Hour Summary

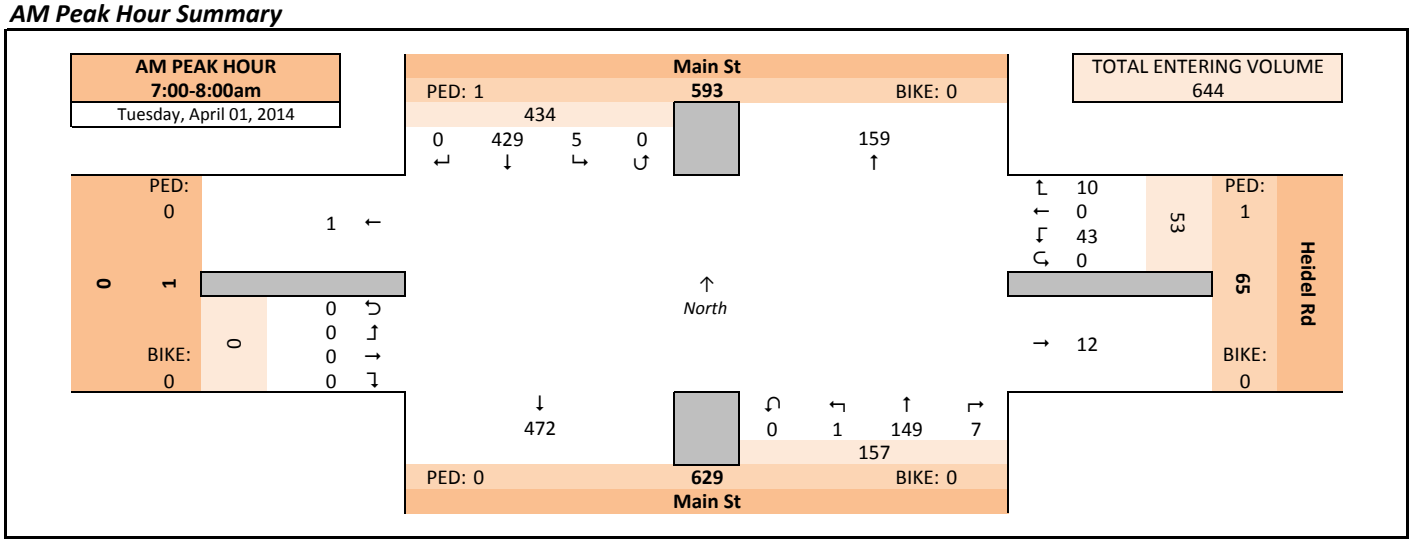

Midday (MD) Peak Hour Summary

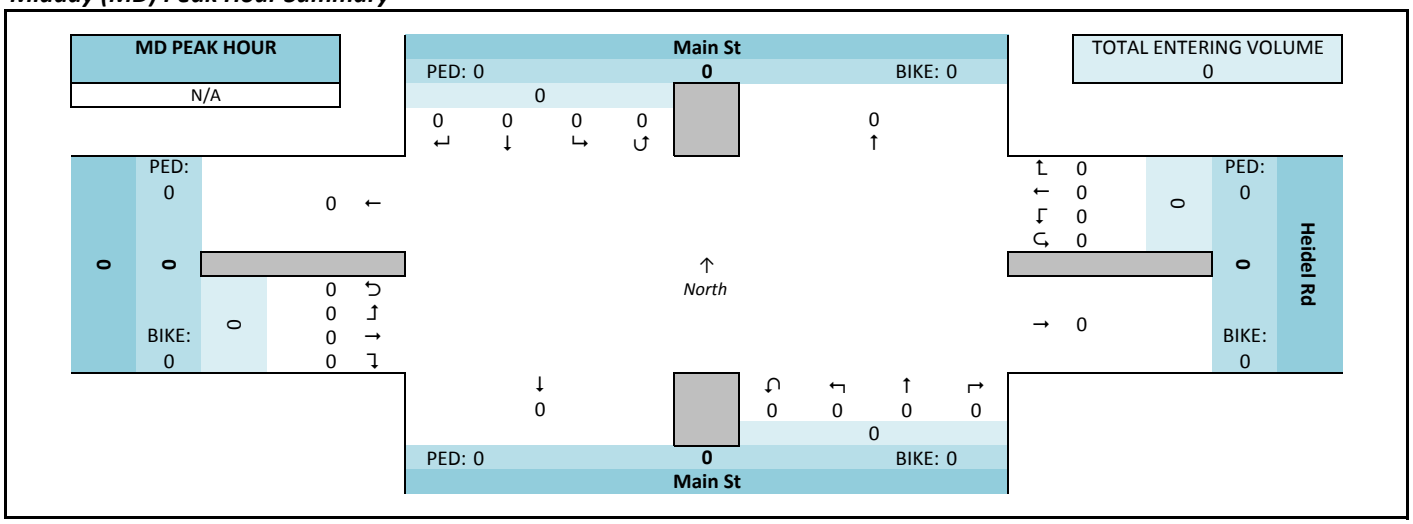

PM Peak Hour Summary

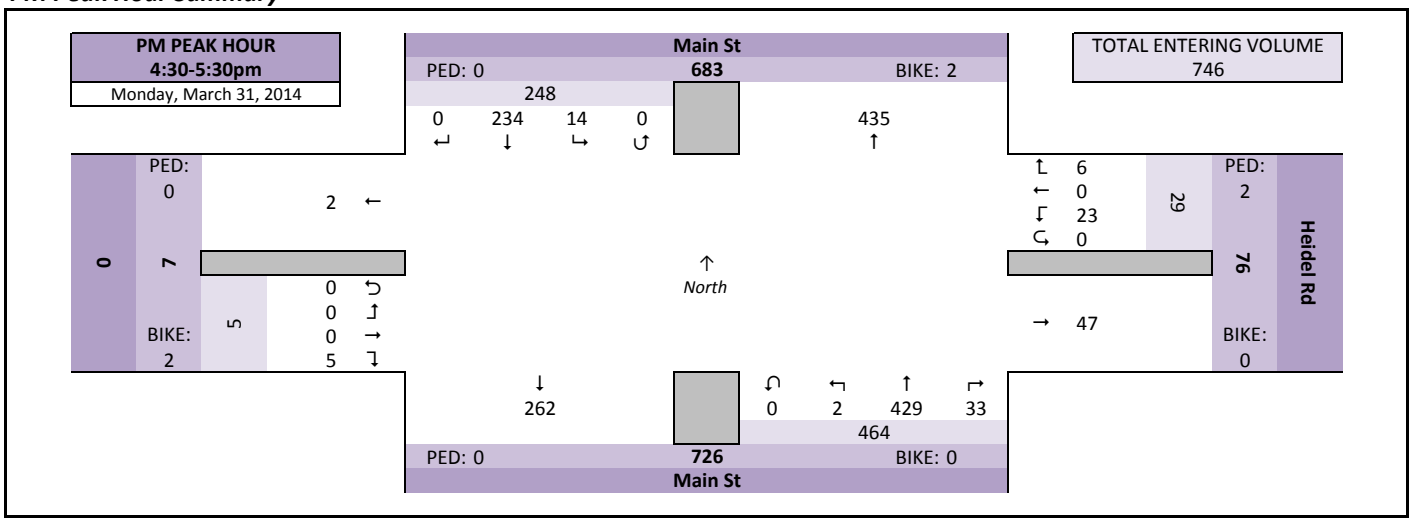

Intersection Traffic Volume Report

Count Basics			Page 3 of 11
Start Date:	Monday, March 31, 2014	Weekday	Schools in Session
Total Number of Hours Counted: 5		Non-Holiday	No Special Events

Peak Hour Volume Summary

Main St and Heidel Rd

All Motor Vehicles

Peak Hour Volumes, Truck Percentages, and PHFs

Tuesday, April 01, 2014		From North					From East					From South					From West					
	AM Peak Hour	Main St					Heidel Rd					Main St					0					
	Start Time	Right	Thru	Left	U-Tn	Total	Right	Thru	Left	U-Tn	Total	Right	Thru	Left	U-Tn	Total	Right	Thru	Left	U-Tn	Total	Totals
AM Peak Hour	7:00 AM	0	77	0	0	77	3	0	10	0	13	2	27	0	0	29	0	0	0	0	0	119
	7:15 AM	0	105	2	0	107	3	0	12	0	15	1	36	0	0	37	0	0	0	0	0	159
	7:30 AM	0	138	0	0	138	2	0	11	0	13	2	41	1	0	44	0	0	0	0	0	195
	7:45 AM	0	109	3	0	112	2	0	10	0	12	2	45	0	0	47	0	0	0	0	0	171
	Peak Hour Volume	0	429	5	0	434	10	0	43	0	53	7	149	1	0	157	0	0	0	0	0	644
	Rounded Hourly Volume	0	430	5	0	435	10	0	45	0	55	5	150	0	0	155	0	0	0	0	0	645
	% Single Unit Trucks	0.0	0.9	0.0	0.0	0.9	0.0	0.0	2.3	0.0	1.9	0.0	2.7	0.0	0.0	2.5	0.0	0.0	0.0	0.0	0.0	1.4
	% Heavy Trucks	0.0	0.2	0.0	0.0	0.2	0.0	0.0	0.0	0.0	0.0	0.0	0.7	0.0	0.0	0.6	0.0	0.0	0.0	0.0	0.0	0.3
	% Trucks (Total)	0.0	1.2	0.0	0.0	1.2	0.0	0.0	2.3	0.0	1.9	0.0	3.4	0.0	0.0	3.2	0.0	0.0	0.0	0.0	0.0	1.7
	Peak Hour Factor (PHF)	0.00	0.78	0.42	0.00	0.79	0.83	0.00	0.90	0.00	0.88	0.87	0.83	0.25	0.00	0.84	0.00	0.00	0.00	0.00	0.00	0.83

N/A		From North					From East					From South					From West					
	MD Peak Hour	Main St					Heidel Rd					Main St					0					
	Start Time	Right	Thru	Left	U-Tn	Total	Right	Thru	Left	U-Tn	Total	Right	Thru	Left	U-Tn	Total	Right	Thru	Left	U-Tn	Total	Totals
Midday (MD) Peak Hour	12:00 PM	0	0	0	0	0	0	0	0	0	0	0	0	0	0	0	0	0	0	0	0	0
	12:15 PM	0	0	0	0	0	0	0	0	0	0	0	0	0	0	0	0	0	0	0	0	0
	12:30 PM	0	0	0	0	0	0	0	0	0	0	0	0	0	0	0	0	0	0	0	0	0
	12:45 PM	0	0	0	0	0	0	0	0	0	0	0	0	0	0	0	0	0	0	0	0	0
	Peak Hour Volume	0	0	0	0	0	0	0	0	0	0	0	0	0	0	0	0	0	0	0	0	0
	Rounded Hourly Volume	0	0	0	0	0	0	0	0	0	0	0	0	0	0	0	0	0	0	0	0	0
	% Single Unit Trucks	0.0	0.0	0.0	0.0	0.0	0.0	0.0	0.0	0.0	0.0	0.0	0.0	0.0	0.0	0.0	0.0	0.0	0.0	0.0	0.0	0.0
	% Heavy Trucks	0.0	0.0	0.0	0.0	0.0	0.0	0.0	0.0	0.0	0.0	0.0	0.0	0.0	0.0	0.0	0.0	0.0	0.0	0.0	0.0	0.0
	% Trucks (Total)	0.0	0.0	0.0	0.0	0.0	0.0	0.0	0.0	0.0	0.0	0.0	0.0	0.0	0.0	0.0	0.0	0.0	0.0	0.0	0.0	0.0
	Peak Hour Factor (PHF)	0.00	0.00	0.00	0.00	0.00	0.00	0.00	0.00	0.00	0.00	0.00	0.00	0.00	0.00	0.00	0.00	0.00	0.00	0.00	0.00	0.00

Monday, March 31, 2014		From North					From East					From South					From West					
	PM Peak Hour	Main St					Heidel Rd					Main St					0					
	Start Time	Right	Thru	Left	U-Tn	Total	Right	Thru	Left	U-Tn	Total	Right	Thru	Left	U-Tn	Total	Right	Thru	Left	U-Tn	Total	Totals
PM Peak Hour	4:30 PM	0	60	4	0	64	2	0	2	0	4	10	100	1	0	111	1	0	0	0	1	180
	4:45 PM	0	66	5	0	71	1	0	12	0	13	8	104	0	0	112	1	0	0	0	1	197
	5:00 PM	0	56	2	0	58	2	0	6	0	8	9	104	0	0	113	1	0	0	0	1	180
	5:15 PM	0	52	3	0	55	1	0	3	0	4	6	121	1	0	128	2	0	0	0	2	189
	Peak Hour Volume	0	234	14	0	248	6	0	23	0	29	33	429	2	0	464	5	0	0	0	5	746
	Rounded Hourly Volume	0	235	15	0	250	5	0	25	0	30	35	430	0	0	465	5	0	0	0	5	750
	% Single Unit Trucks	0.0	1.7	0.0	0.0	1.6	0.0	0.0	8.7	0.0	6.9	0.0	0.9	0.0	0.0	0.9	0.0	0.0	0.0	0.0	0.0	1.3
	% Heavy Trucks	0.0	0.0	0.0	0.0	0.0	0.0	0.0	0.0	0.0	0.0	0.0	0.0	0.0	0.0	0.0	0.0	0.0	0.0	0.0	0.0	0.0
	% Trucks (Total)	0.0	1.7	0.0	0.0	1.6	0.0	0.0	8.7	0.0	6.9	0.0	0.9	0.0	0.0	0.9	0.0	0.0	0.0	0.0	0.0	1.3
	Peak Hour Factor (PHF)	0.00	0.89	0.70	0.00	0.87	0.75	0.00	0.48	0.00	0.56	0.82	0.89	0.50	0.00	0.91	0.62	0.00	0.00	0.00	0.62	0.95

Peak Hour Pedestrian and Bicyclist Volumes

Pedestrians and Bicyclists		Crossing North Approach			Crossing East Approach			Crossing South Approach			Crossing West Approach			Total Ped & Bike Volume
		Main St			Heidel Rd			Main St			0			
	15-Minute Start Time	Pedestrian	Bicyclist	Total	Pedestrian	Bicyclist	Total	Pedestrian	Bicyclist	Total	Pedestrian	Bicyclist	Total	
AM	7:00 AM	1	0	1	0	0	0	0	0	0	0	0	0	1
	7:15 AM	0	0	0	0	0	0	0	0	0	0	0	0	0
	7:30 AM	0	0	0	1	0	1	0	0	0	0	0	0	1
	7:45 AM	0	0	0	0	0	0	0	0	0	0	0	0	0
	Total	1	0	1	1	0	1	0	0	0	0	0	0	2
MD	12:00 PM	0	0	0	0	0	0	0	0	0	0	0	0	0
	12:15 PM	0	0	0	0	0	0	0	0	0	0	0	0	0
	12:30 PM	0	0	0	0	0	0	0	0	0	0	0	0	0
	12:45 PM	0	0	0	0	0	0	0	0	0	0	0	0	0
	Total	0	0	0	0	0	0	0	0	0	0	0	0	0
PM	4:30 PM	0	0	0	0	0	0	0	0	0	0	1	1	1
	4:45 PM	0	2	2	0	0	0	0	0	0	0	1	1	3
	5:00 PM	0	0	0	2	0	2	0	0	0	0	0	0	2
	5:15 PM	0	0	0	0	0	0	0	0	0	0	0	0	0
	Total	0	2	2	2	0	2	0	0	0	0	2	2	6

Intersection Traffic Volume Report

Count Basics		*Page 5 of 11*
Start Date: Monday, March 31, 2014	Weekday	Schools in Session
Total Number of Hours Counted: 5	Non-Holiday	No Special Events

15-Minute Motor Vehicle Data

All Motor Vehicles

Main St and Heidel Rd

15-Minute Motor Vehicle Data

	15-Minute Time Period Start Time	From North (Main St)					From East (Heidel Rd)					From South (Main St)					From West (0)					15-Min Totals	Hourly Sum	PHF
		Right	Thru	Left	U-Tn	Total	Right	Thru	Left	U-Tn	Total	Right	Thru	Left	U-Tn	Total	Right	Thru	Left	U-Tn	Total			
AM Peak Period	6:00 AM	0	0	0	0	0	0	0	0	0	0	0	0	0	0	0	0	0	0	0	0	0		
	6:15 AM	0	0	0	0	0	0	0	0	0	0	0	0	0	0	0	0	0	0	0	0	0		
	6:30 AM	0	66	2	0	68	1	0	11	0	12	2	22	0	0	24	0	0	0	0	0	104	500	0.79
	6:45 AM	0	75	0	0	75	3	0	9	0	12	1	30	0	0	31	0	0	0	0	0	118	591	0.76
	7:00 AM	0	77	0	0	77	3	0	10	0	13	2	27	0	0	29	0	0	0	0	0	119	644	0.83
	7:15 AM	0	105	2	0	107	3	0	12	0	15	1	36	0	0	37	0	0	0	0	0	159	649	0.83
	7:30 AM	0	138	0	0	138	2	0	11	0	13	2	41	1	0	44	0	0	0	0	0	195	627	0.80
	7:45 AM	0	109	3	0	112	2	0	10	0	12	2	45	0	0	47	0	0	0	0	0	171		
	8:00 AM	0	71	1	0	72	4	0	11	0	15	4	32	1	0	37	0	0	0	0	0	124		
	8:15 AM	1	69	1	0	71	1	0	14	0	15	0	49	1	0	50	1	0	0	0	1	137		
	8:30 AM	0	0	0	0	0	0	0	0	0	0	0	0	0	0	0	0	0	0	0	0	0		
	8:45 AM	0	0	0	0	0	0	0	0	0	0	0	0	0	0	0	0	0	0	0	0	0		
	9:00 AM	0	0	0	0	0	0	0	0	0	0	0	0	0	0	0	0	0	0	0	0	0		
	9:15 AM	0	0	0	0	0	0	0	0	0	0	0	0	0	0	0	0	0	0	0	0	0		
	9:30 AM	0	0	0	0	0	0	0	0	0	0	0	0	0	0	0	0	0	0	0	0	0		
	9:45 AM	0	0	0	0	0	0	0	0	0	0	0	0	0	0	0	0	0	0	0	0	0		
Midday Peak Period	10:00 AM	0	0	0	0	0	0	0	0	0	0	0	0	0	0	0	0	0	0	0	0	0		
	10:15 AM	0	0	0	0	0	0	0	0	0	0	0	0	0	0	0	0	0	0	0	0	0		
	10:30 AM	0	0	0	0	0	0	0	0	0	0	0	0	0	0	0	0	0	0	0	0	0		
	10:45 AM	0	0	0	0	0	0	0	0	0	0	0	0	0	0	0	0	0	0	0	0	0		
	11:00 AM	0	0	0	0	0	0	0	0	0	0	0	0	0	0	0	0	0	0	0	0	0		
	11:15 AM	0	0	0	0	0	0	0	0	0	0	0	0	0	0	0	0	0	0	0	0	0		
	11:30 AM	0	0	0	0	0	0	0	0	0	0	0	0	0	0	0	0	0	0	0	0	0		
	11:45 AM	0	0	0	0	0	0	0	0	0	0	0	0	0	0	0	0	0	0	0	0	0		
	12:00 PM	0	0	0	0	0	0	0	0	0	0	0	0	0	0	0	0	0	0	0	0	0		
	12:15 PM	0	0	0	0	0	0	0	0	0	0	0	0	0	0	0	0	0	0	0	0	0		
	12:30 PM	0	0	0	0	0	0	0	0	0	0	0	0	0	0	0	0	0	0	0	0	0		
	12:45 PM	0	0	0	0	0	0	0	0	0	0	0	0	0	0	0	0	0	0	0	0	0		
	1:00 PM	0	0	0	0	0	0	0	0	0	0	0	0	0	0	0	0	0	0	0	0	0		
	1:15 PM	0	0	0	0	0	0	0	0	0	0	0	0	0	0	0	0	0	0	0	0	0		
	1:30 PM	0	0	0	0	0	0	0	0	0	0	0	0	0	0	0	0	0	0	0	0	0		
	1:45 PM	0	0	0	0	0	0	0	0	0	0	0	0	0	0	0	0	0	0	0	0	0		
PM Peak Period	2:00 PM	0	0	0	0	0	0	0	0	0	0	0	0	0	0	0	0	0	0	0	0	0		
	2:15 PM	0	0	0	0	0	0	0	0	0	0	0	0	0	0	0	0	0	0	0	0	0		
	2:30 PM	0	48	1	0	49	6	0	1	0	7	10	63	0	0	73	0	0	0	0	0	129	580	0.95
	2:45 PM	1	60	2	0	63	2	0	8	0	10	8	71	0	0	79	0	0	0	0	0	152	614	0.94
	3:00 PM	0	70	3	0	73	1	1	6	0	8	3	64	0	0	67	2	0	0	0	2	150	660	0.83
	3:15 PM	0	53	2	0	55	1	0	8	0	9	8	73	2	0	83	2	0	0	0	2	149	684	0.86
	3:30 PM	0	55	4	0	59	0	1	4	0	5	10	89	0	0	99	0	0	0	0	0	163	699	0.88
	3:45 PM	0	67	5	0	72	2	0	5	0	7	14	103	0	0	117	1	0	1	0	2	198	716	0.90
	4:00 PM	0	55	2	0	57	1	0	5	0	6	9	99	0	0	108	2	1	0	0	3	174	715	0.91
	4:15 PM	0	61	2	0	63	4	0	3	0	7	7	86	0	0	93	1	0	0	0	1	164	721	0.91
	4:30 PM	0	60	4	0	64	2	0	2	0	4	10	100	1	0	111	1	0	0	0	1	180	746	0.95
	4:45 PM	0	66	5	0	71	1	0	12	0	13	8	104	0	0	112	1	0	0	0	1	197		
	5:00 PM	0	56	2	0	58	2	0	6	0	8	9	104	0	0	113	1	0	0	0	1	180		
	5:15 PM	0	52	3	0	55	1	0	3	0	4	6	121	1	0	128	2	0	0	0	2	189		
	5:30 PM	0	0	0	0	0	0	0	0	0	0	0	0	0	0	0	0	0	0	0	0	0		
	5:45 PM	0	0	0	0	0	0	0	0	0	0	0	0	0	0	0	0	0	0	0	0	0		
	6:00 PM	0	0	0	0	0	0	0	0	0	0	0	0	0	0	0	0	0	0	0	0	0		
	6:15 PM	0	0	0	0	0	0	0	0	0	0	0	0	0	0	0	0	0	0	0	0	0		
	6:30 PM	0	0	0	0	0	0	0	0	0	0	0	0	0	0	0	0	0	0	0	0	0		
	6:45 PM	0	0	0	0	0	0	0	0	0	0	0	0	0	0	0	0	0	0	0	0	0		
	7:00 PM	0	0	0	0	0	0	0	0	0	0	0	0	0	0	0	0	0	0	0	0	0		
	7:15 PM	0	0	0	0	0	0	0	0	0	0	0	0	0	0	0	0	0	0	0	0	0		
	7:30 PM	0	0	0	0	0	0	0	0	0	0	0	0	0	0	0	0	0	0	0	0	0		
	7:45 PM	0	0	0	0	0	0	0	0	0	0	0	0	0	0	0	0	0	0	0	0	0		
	8:00 PM	0	0	0	0	0	0	0	0	0	0	0	0	0	0	0	0	0	0	0	0	0		
	8:15 PM	0	0	0	0	0	0	0	0	0	0	0	0	0	0	0	0	0	0	0	0	0		
	8:30 PM	0	0	0	0	0	0	0	0	0	0	0	0	0	0	0	0	0	0	0	0	0		
	8:45 PM	0	0	0	0	0	0	0	0	0	0	0	0	0	0	0	0	0	0	0	0	0		
	9:00 PM	0	0	0	0	0	0	0	0	0	0	0	0	0	0	0	0	0	0	0	0	0		
	9:15 PM	0	0	0	0	0	0	0	0	0	0	0	0	0	0	0	0	0	0	0	0	0		
	9:30 PM	0	0	0	0	0	0	0	0	0	0	0	0	0	0	0	0	0	0	0	0	0		
	9:45 PM	0	0	0	0	0	0	0	0	0	0	0	0	0	0	0	0	0	0	0	0	0		
Totals		2	1413	44	0	1459	42	2	151	0	195	116	1359	7	0	1482	14	1	1	0	16	3152		

Peak Hour All Vehicle Volume Summary

Hourly Time Period	Start Time	From North (Main St)					From East (Heidel Rd)					From South (Main St)					From West (0)					Total Hourly Volume	PHF
		Right	Thru	Left	U-Tn	Total	Right	Thru	Left	U-Tn	Total	Right	Thru	Left	U-Tn	Total	Right	Thru	Left	U-Tn	Total		
AM	7:00 AM	0	429	5	0	434	10	0	43	0	53	7	149	1	0	157	0	0	0	0	0	644	0.83
MD	12:00 PM	0	0	0	0	0	0	0	0	0	0	0	0	0	0	0	0	0	0	0	0	0	
PM	4:30 PM	0	234	14	0	248	6	0	23	0	29	33	429	2	0	464	5	0	0	0	5	746	0.95

Intersection Traffic Volume Report

Count Basics			*Page 9 of 11*
Start Date:	Monday, March 31, 2014	Weekday	Schools in Session
Total Number of Hours Counted: 5		Non-Holiday	No Special Events

15-Minute Heavy Vehicle Data

Heavy Vehicles (Single-Unit Trucks, Buses & Semi-Trucks)

Main St and Heidel Rd

15-Minute Heavy Vehicle Data

15-Minute Time Period Start Time		From North (Main St) Right	Thru	Left	U-Tn	Total	From East (Heidel Rd) Right	Thru	Left	U-Tn	Total	From South (Main St) Right	Thru	Left	U-Tn	Total	From West (0) Right	Thru	Left	U-Tn	Total	15-Min Totals	Hourly Sum
AM Peak Period	6:00 AM	0	0	0	0	0	0	0	0	0	0	0	0	0	0	0	0	0	0	0	0	0		
	6:15 AM	0	0	0	0	0	0	0	0	0	0	0	0	0	0	0	0	0	0	0	0	0		
	6:30 AM	0	1	0	0	1	0	0	0	0	0	0	0	0	0	0	0	0	0	0	0	1		9
	6:45 AM	0	3	0	0	3	0	0	0	0	0	0	2	0	0	2	0	0	0	0	0	5		11
	7:00 AM	0	0	0	0	0	0	0	0	0	0	0	2	0	0	2	0	0	0	0	0	2		11
	7:15 AM	0	1	0	0	1	0	0	0	0	0	0	0	0	0	0	0	0	0	0	0	1		12
	7:30 AM	0	2	0	0	2	0	0	1	0	1	0	0	0	0	0	0	0	0	0	0	3		15
	7:45 AM	0	2	0	0	2	0	0	0	0	0	0	3	0	0	3	0	0	0	0	0	5		
	8:00 AM	0	0	0	0	0	1	0	0	0	1	1	1	0	0	2	0	0	0	0	0	3		
	8:15 AM	0	1	0	0	1	0	0	0	0	0	0	3	0	0	3	0	0	0	0	0	4		
	8:30 AM	0	0	0	0	0	0	0	0	0	0	0	0	0	0	0	0	0	0	0	0	0		
	8:45 AM	0	0	0	0	0	0	0	0	0	0	0	0	0	0	0	0	0	0	0	0	0		
	9:00 AM	0	0	0	0	0	0	0	0	0	0	0	0	0	0	0	0	0	0	0	0	0		
	9:15 AM	0	0	0	0	0	0	0	0	0	0	0	0	0	0	0	0	0	0	0	0	0		
	9:30 AM	0	0	0	0	0	0	0	0	0	0	0	0	0	0	0	0	0	0	0	0	0		
	9:45 AM	0	0	0	0	0	0	0	0	0	0	0	0	0	0	0	0	0	0	0	0	0		
Midday Peak Period	10:00 AM	0	0	0	0	0	0	0	0	0	0	0	0	0	0	0	0	0	0	0	0	0		
	10:15 AM	0	0	0	0	0	0	0	0	0	0	0	0	0	0	0	0	0	0	0	0	0		
	10:30 AM	0	0	0	0	0	0	0	0	0	0	0	0	0	0	0	0	0	0	0	0	0		
	10:45 AM	0	0	0	0	0	0	0	0	0	0	0	0	0	0	0	0	0	0	0	0	0		
	11:00 AM	0	0	0	0	0	0	0	0	0	0	0	0	0	0	0	0	0	0	0	0	0		
	11:15 AM	0	0	0	0	0	0	0	0	0	0	0	0	0	0	0	0	0	0	0	0	0		
	11:30 AM	0	0	0	0	0	0	0	0	0	0	0	0	0	0	0	0	0	0	0	0	0		
	11:45 AM	0	0	0	0	0	0	0	0	0	0	0	0	0	0	0	0	0	0	0	0	0		
	12:00 PM	0	0	0	0	0	0	0	0	0	0	0	0	0	0	0	0	0	0	0	0	0		
	12:15 PM	0	0	0	0	0	0	0	0	0	0	0	0	0	0	0	0	0	0	0	0	0		
	12:30 PM	0	0	0	0	0	0	0	0	0	0	0	0	0	0	0	0	0	0	0	0	0		
	12:45 PM	0	0	0	0	0	0	0	0	0	0	0	0	0	0	0	0	0	0	0	0	0		
	1:00 PM	0	0	0	0	0	0	0	0	0	0	0	0	0	0	0	0	0	0	0	0	0		
	1:15 PM	0	0	0	0	0	0	0	0	0	0	0	0	0	0	0	0	0	0	0	0	0		
	1:30 PM	0	0	0	0	0	0	0	0	0	0	0	0	0	0	0	0	0	0	0	0	0		
	1:45 PM	0	0	0	0	0	0	0	0	0	0	0	0	0	0	0	0	0	0	0	0	0		
PM Peak Period	2:00 PM	0	0	0	0	0	0	0	0	0	0	0	0	0	0	0	0	0	0	0	0	0		
	2:15 PM	0	0	0	0	0	0	0	0	0	0	0	0	0	0	0	0	0	0	0	0	0		
	2:30 PM	0	0	0	0	0	0	0	0	0	0	0	1	0	0	1	0	0	0	0	0	1		14
	2:45 PM	1	0	0	0	1	0	0	0	0	0	0	3	0	0	3	0	0	0	0	0	4		15
	3:00 PM	0	3	0	0	3	0	0	0	0	0	0	2	0	0	2	0	0	0	0	0	5		14
	3:15 PM	0	3	0	0	3	0	0	0	0	0	0	1	0	0	1	0	0	0	0	0	4		11
	3:30 PM	0	0	0	0	0	0	0	1	0	1	0	1	0	0	1	0	0	0	0	0	2		12
	3:45 PM	0	1	0	0	1	0	0	0	0	0	1	1	0	0	2	0	0	0	0	0	3		15
	4:00 PM	0	0	0	0	0	0	0	0	0	0	0	2	0	0	2	0	0	0	0	0	2		15
	4:15 PM	0	3	0	0	3	0	0	0	0	0	1	1	0	0	2	0	0	0	0	0	5		13
	4:30 PM	0	3	0	0	3	0	0	1	0	1	0	1	0	0	1	0	0	0	0	0	5		10
	4:45 PM	0	1	0	0	1	0	0	1	0	1	0	1	0	0	1	0	0	0	0	0	3		
	5:00 PM	0	0	0	0	0	0	0	0	0	0	0	0	0	0	0	0	0	0	0	0	0		
	5:15 PM	0	0	0	0	0	0	0	0	0	0	0	2	0	0	2	0	0	0	0	0	2		
	5:30 PM	0	0	0	0	0	0	0	0	0	0	0	0	0	0	0	0	0	0	0	0	0		
	5:45 PM	0	0	0	0	0	0	0	0	0	0	0	0	0	0	0	0	0	0	0	0	0		
	6:00 PM	0	0	0	0	0	0	0	0	0	0	0	0	0	0	0	0	0	0	0	0	0		
	6:15 PM	0	0	0	0	0	0	0	0	0	0	0	0	0	0	0	0	0	0	0	0	0		
	6:30 PM	0	0	0	0	0	0	0	0	0	0	0	0	0	0	0	0	0	0	0	0	0		
	6:45 PM	0	0	0	0	0	0	0	0	0	0	0	0	0	0	0	0	0	0	0	0	0		
	7:00 PM	0	0	0	0	0	0	0	0	0	0	0	0	0	0	0	0	0	0	0	0	0		
	7:15 PM	0	0	0	0	0	0	0	0	0	0	0	0	0	0	0	0	0	0	0	0	0		
	7:30 PM	0	0	0	0	0	0	0	0	0	0	0	0	0	0	0	0	0	0	0	0	0		
	7:45 PM	0	0	0	0	0	0	0	0	0	0	0	0	0	0	0	0	0	0	0	0	0		
	8:00 PM	0	0	0	0	0	0	0	0	0	0	0	0	0	0	0	0	0	0	0	0	0		
	8:15 PM	0	0	0	0	0	0	0	0	0	0	0	0	0	0	0	0	0	0	0	0	0		
	8:30 PM	0	0	0	0	0	0	0	0	0	0	0	0	0	0	0	0	0	0	0	0	0		
	8:45 PM	0	0	0	0	0	0	0	0	0	0	0	0	0	0	0	0	0	0	0	0	0		
	9:00 PM	0	0	0	0	0	0	0	0	0	0	0	0	0	0	0	0	0	0	0	0	0		
	9:15 PM	0	0	0	0	0	0	0	0	0	0	0	0	0	0	0	0	0	0	0	0	0		
	9:30 PM	0	0	0	0	0	0	0	0	0	0	0	0	0	0	0	0	0	0	0	0	0		
	9:45 PM	0	0	0	0	0	0	0	0	0	0	0	0	0	0	0	0	0	0	0	0	0		
Totals		1	24	0	0	25	1	0	4	0	5	3	27	0	0	30	0	0	0	0	0	60		

Peak Hour Heavy Vehicle Volume Summary

Hourly Time Period Start Time		From North (Main St) Right	Thru	Left	U-Tn	Total	From East (Heidel Rd) Right	Thru	Left	U-Tn	Total	From South (Main St) Right	Thru	Left	U-Tn	Total	From West (0) Right	Thru	Left	U-Tn	Total	Total Hourly Volume
AM	7:00 AM	0	5	0	0	5	0	0	1	0	1	0	5	0	0	5	0	0	0	0	0	11
MD	12:00 PM	0	0	0	0	0	0	0	0	0	0	0	0	0	0	0	0	0	0	0	0	0
PM	4:30 PM	0	4	0	0	4	0	0	2	0	2	0	4	0	0	4	0	0	0	0	0	10

APPENDIX A2

TRAFFIC DATA COLLECTION

WISDOT TRAFFIC FORECASTS

WisDOT TRAFFIC FORECAST REPORT

PROJECT ID(S):	2697-00-75
ROUTE(S):	Main St
Region/COUNTY(IES):	Ozaukee
LOCATION:	Division to Heidel
COMPLETED:	30 April 2014

Developed by: Brent DesRoches
Phone: (262) 548-5611
FAX #: (262) 548-4425
E-Mail: brent.desroches@dot.wi.gov

Design Values (%)

Sites:	450462		
Routes:	Main St		
Volumes:	15760		
K250	10.2		
K100	10.9		
K30	11.4		
P	12.7		
D(Dsgn. Hr.)	59/41		
T(DHV)	4.7		
T(PHV)	4.1		

Site IDs are Colored, Bolded, and Underlined

-000-	2013 Count	(000)	2015 AADT
000	2010 Count	[000]	2025 AADT
		000	2035 AADT
		/000/	xxxx AADT

Truck Class Percents

Class	450462		
2D	1.6		
3AX	1.6		
2S1+2S2	0.7		
3-S2	1.3		
DBL-BTM	0.3		
TOTAL	5.5%		

NOTES ON THE FORECAST:

1. This projection assumes no major new traffic generators will be added to the roadway network. Development from the Mequon Town Center TIA will be added on a separate forecast sheet.

2. Truck classification percentages were taken from a table representative of similar facilities and locations throughout the state of Wisconsin.

3. Main St is a Factor Group II (Urban-Other) highway (indicating low to moderate fluctuation in traffic from a seasonal perspective). It is functionally classified as an Urban Principal Arterial (14) for count purposes.

4. 2013 was the most recent year traffic count data was collected at the locations, and 2013 DOT adjustment factors are applied.

No Development

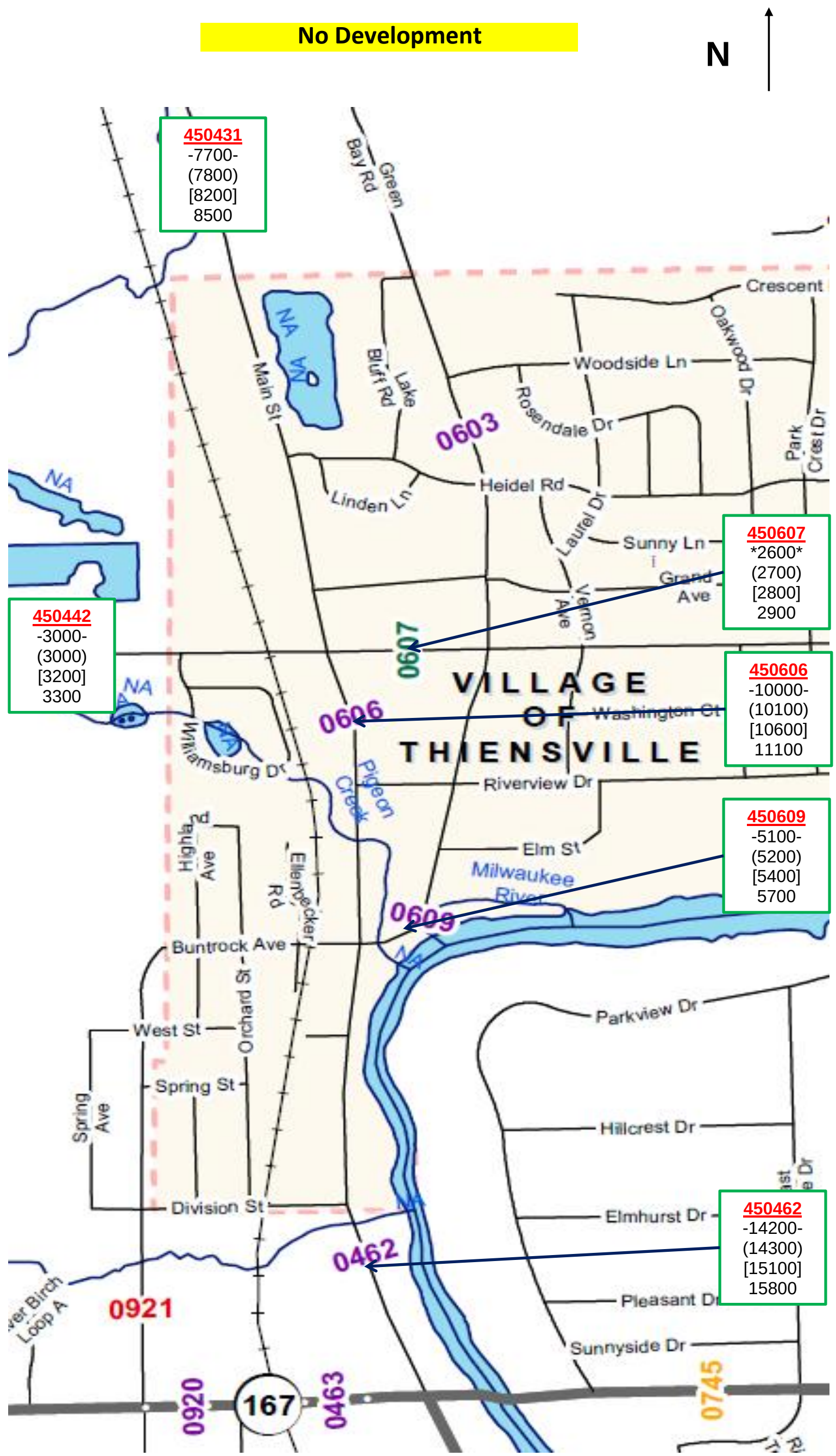

WisDot SE Region
Traffic Forecasting Section
Forecast by: Brent DesRoches
Phone: 262-548-5611
Email: brent.desroches@dot.wi.gov

Projected AM Design Hour Traffic Volumes

No Development

Design Hour: 7:00-8:00am

Forecast Completed: 29 April 2014

Project Description

Project ID: 2697-00-75
Location: Division Rd to Heidel Rd
Route: Main St
Region/County: Ozaukee

Design Hour Turning Movement Data

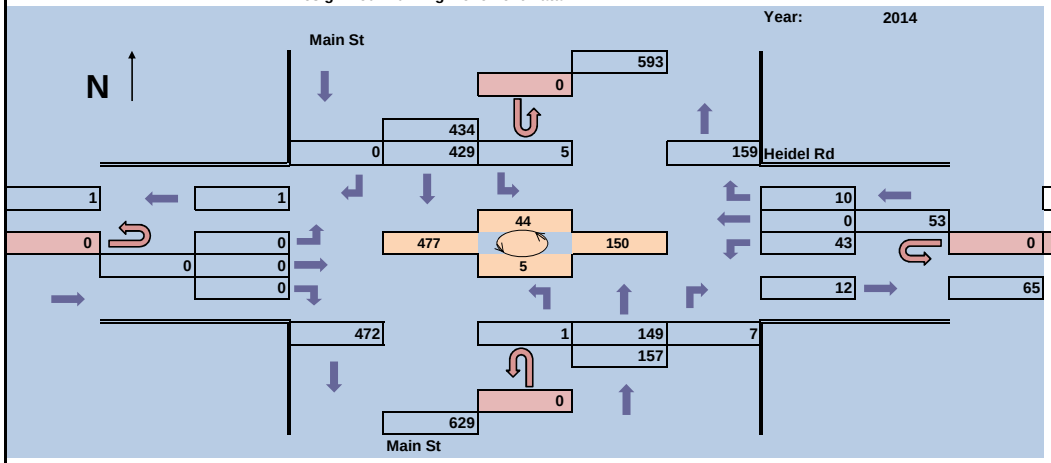

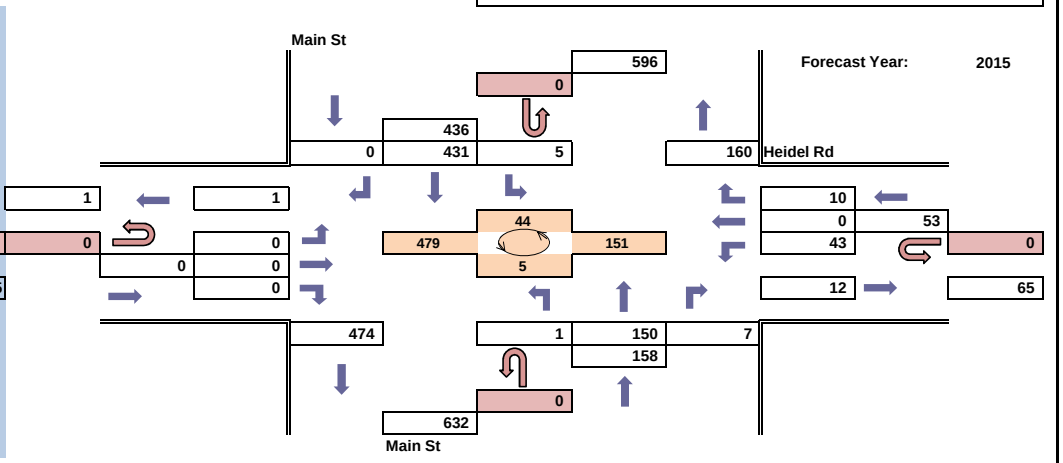

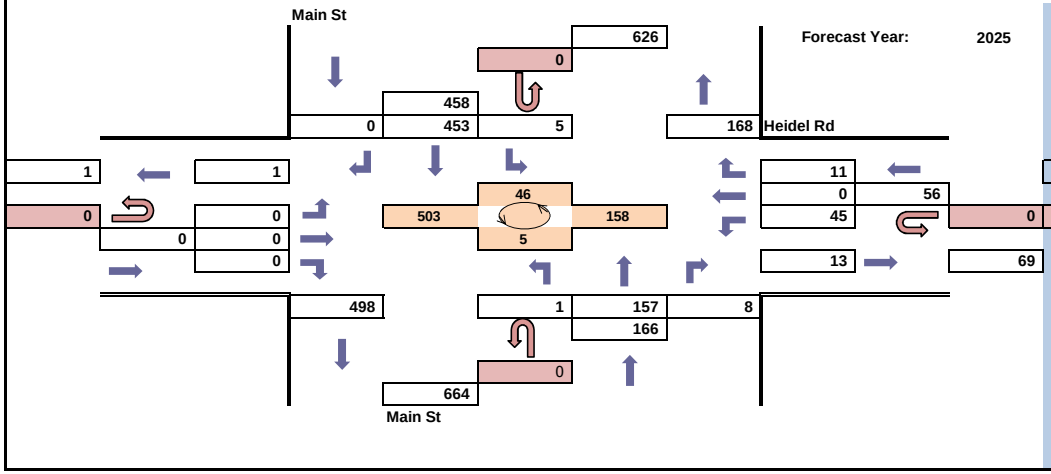

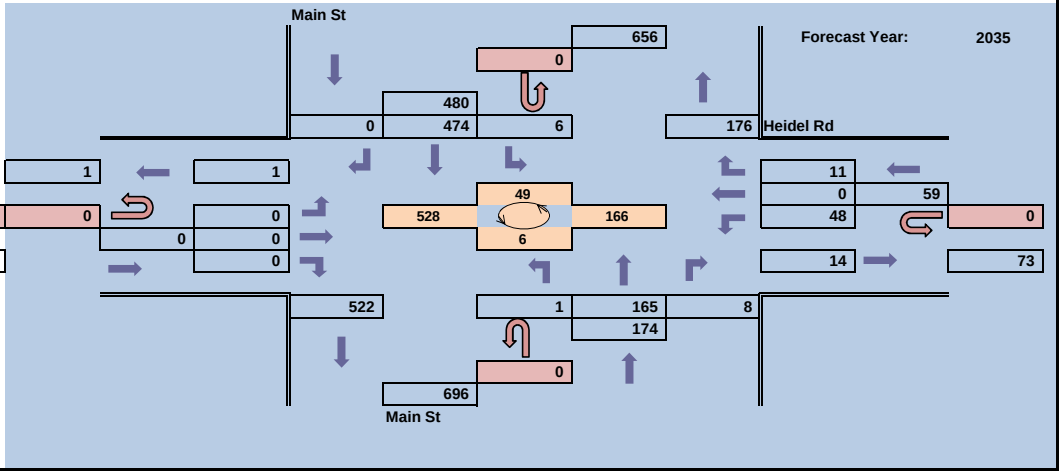

WisDot SE Region

Traffic Forecasting Section
Forecast by: Brent DesRoches
Phone: 262-548-5611
Email: brent.desroches@dot.wi.gov

Projected PM Design Hour Traffic Volumes

No Development

Design Hour: 4:30-5:30pm

Forecast Completed: 29 April 2014

Project Description

Project ID: 2697-00-75
Location: Division Rd to Heidel Rd
Route: Main St
Region/County: Ozaukee

Design Hour Turning Movement Data

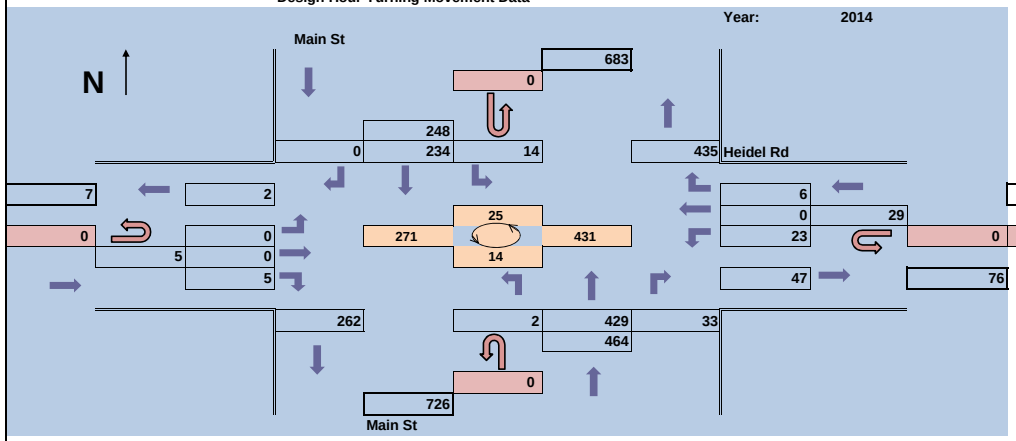

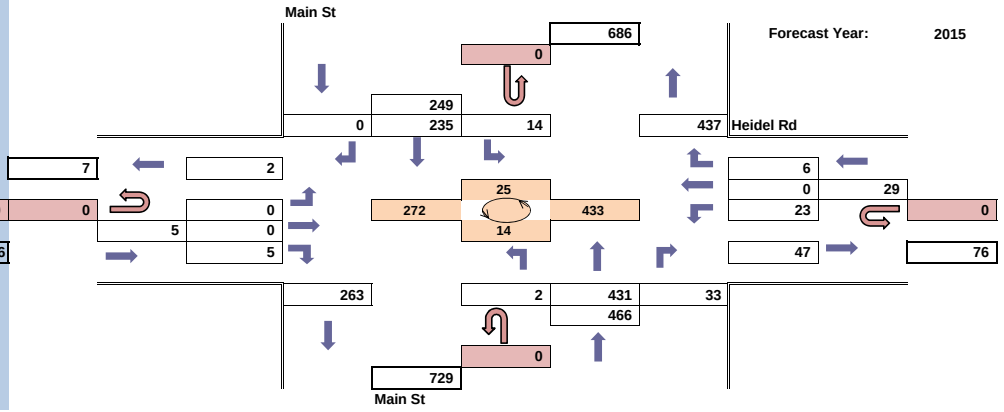

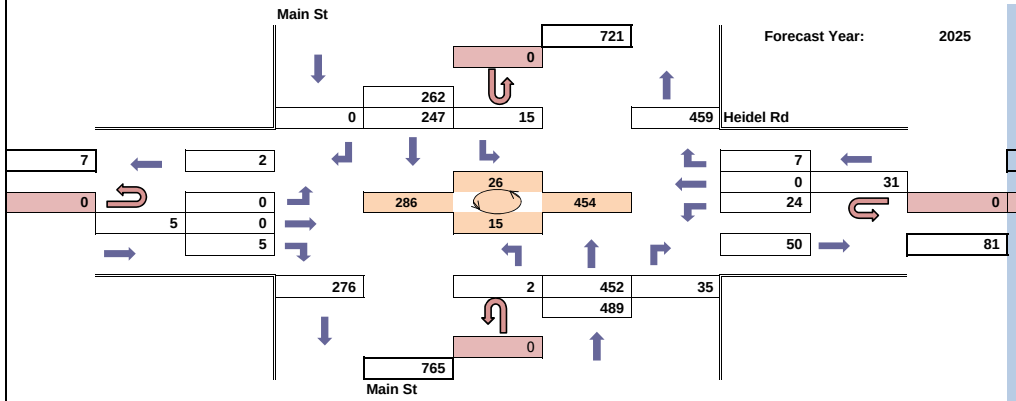

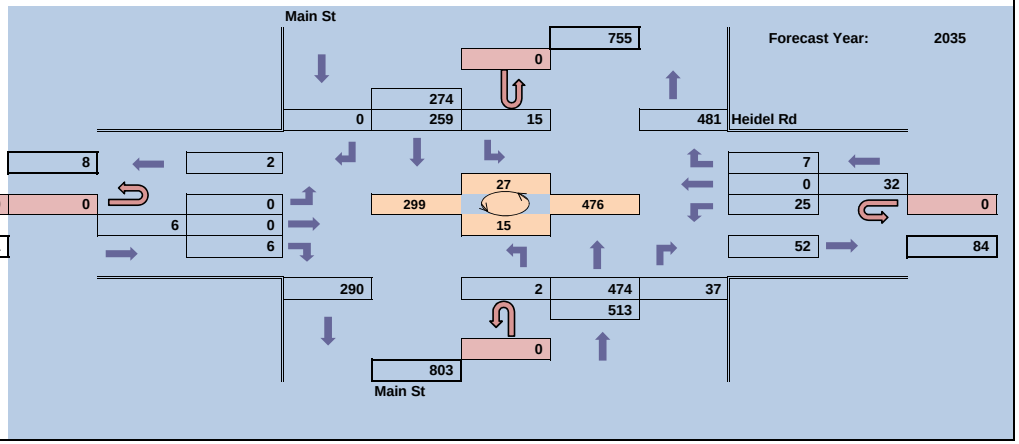

WisDot SE Region
Traffic Forecasting Section
Forecast by: Brent DesRoches
Phone: 262-548-5611
Email: brent.desroches@dot.wi.gov

Projected AM Design Hour Traffic Volumes

No Development

Design Hour: 7:00-8:00am

Forecast Completed: 29 April 2014

Project Description

Project ID: 2697-00-75
Location: Division Rd to Heidel Rd
Route: Main St
Region/County: Ozaukee

Design Hour Turning Movement Data

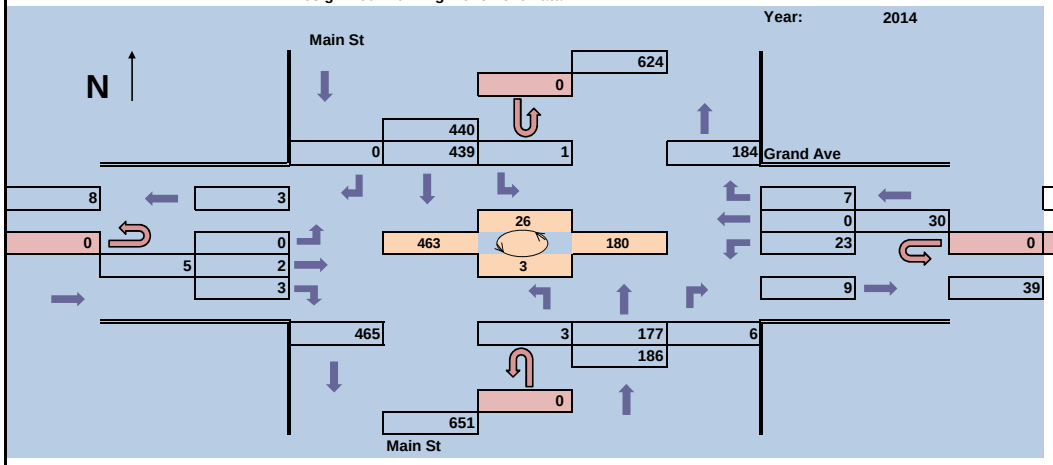

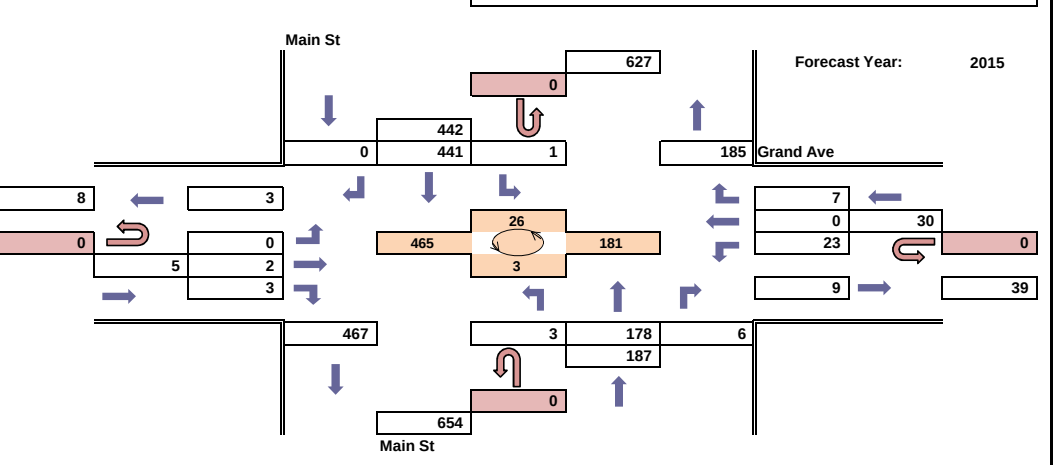

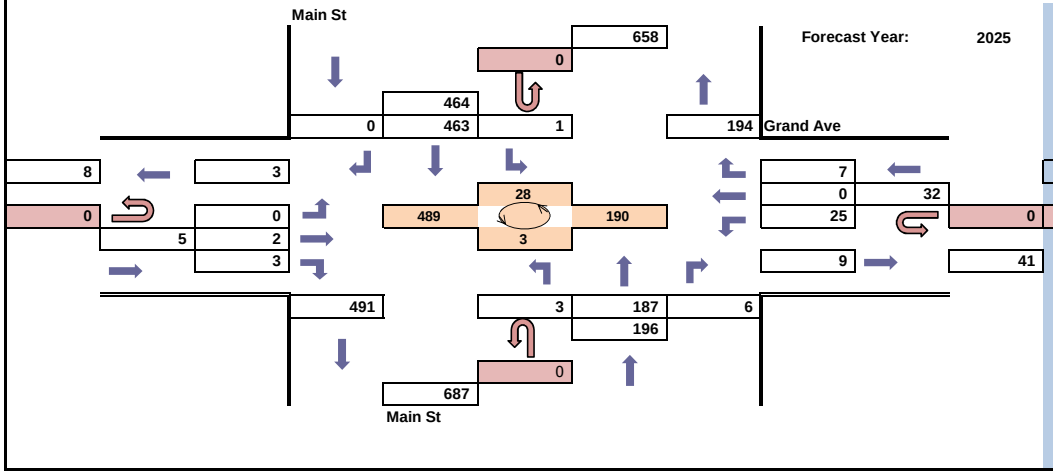

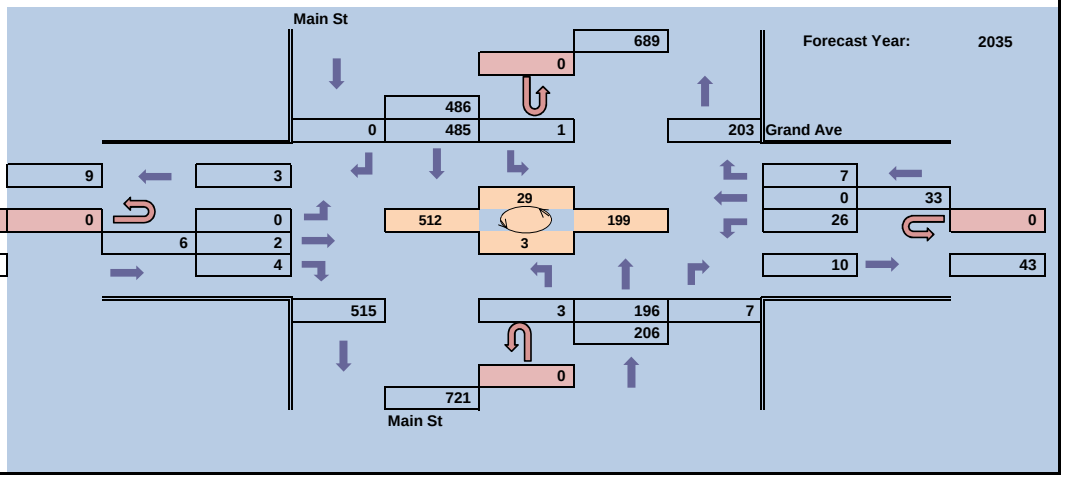

WisDot SE Region

Traffic Forecasting Section
Forecast by: Brent DesRoches
Phone: 262-548-5611
Email: brent.desroches@dot.wi.gov

Projected PM Design Hour Traffic Volumes

No Development

Design Hour: 4:30-5:30pm

Forecast Completed: 29 April 2014

Project Description

Project ID: 2697-00-75
Location: Division Rd to Heidel Rd
Route: Main St
Region/County: Ozaukee

Design Hour Turning Movement Data

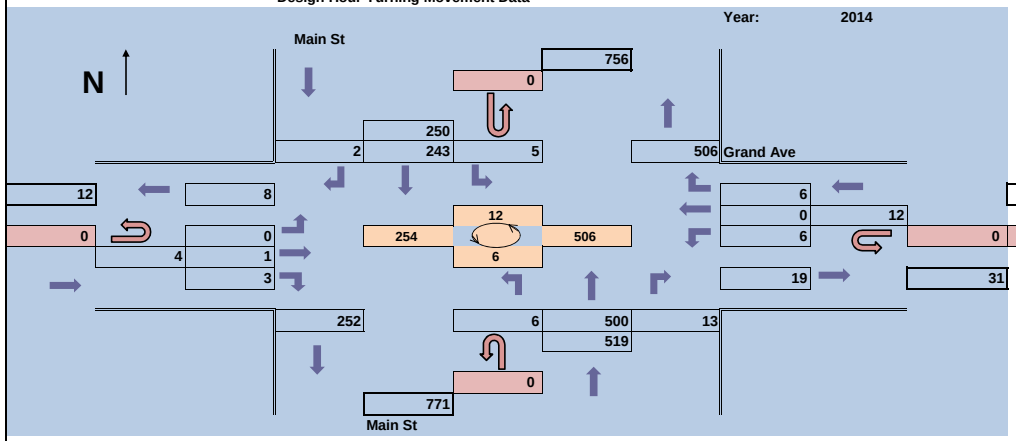

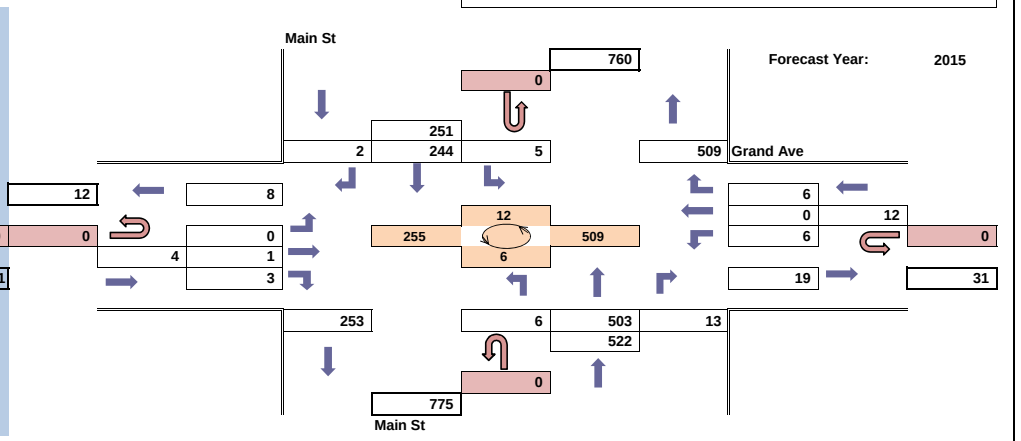

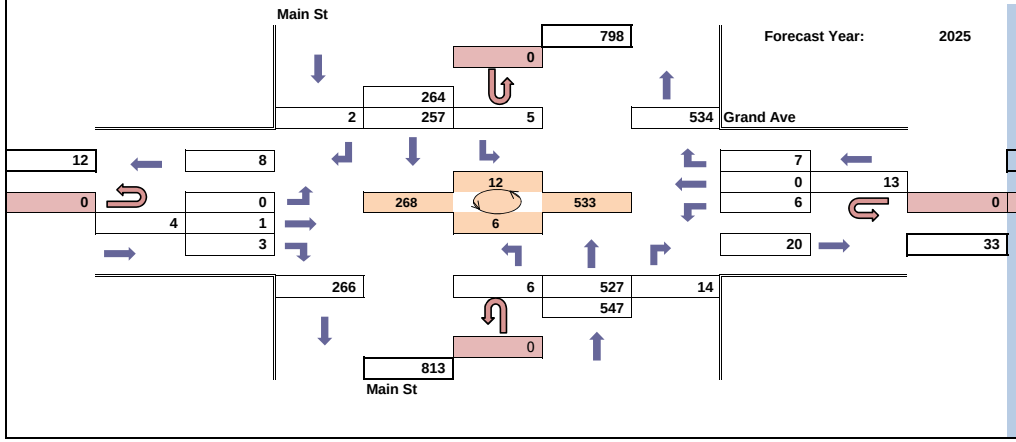

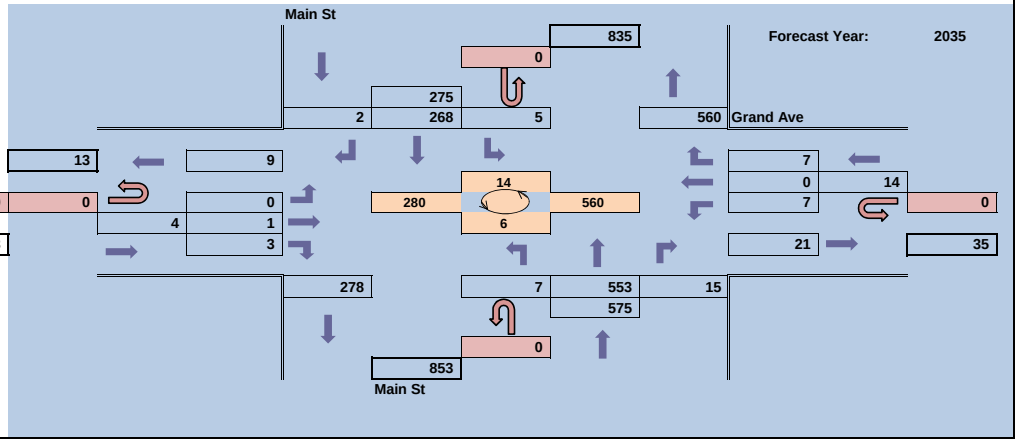

WisDot SE Region
Traffic Forecasting Section
Forecast by: Brent DesRoches
Phone: 262-548-5611
Email: brent.desroches@dot.wi.gov

Projected AM Design Hour Traffic Volumes

No Development

Design Hour: 7:00-8:00am

Forecast Completed: 29 April 2014

Project Description

Project ID: 2697-00-75
Location: Division Rd to Heidel Rd
Route: Main St
Region/County: Ozaukee

Design Hour Turning Movement Data

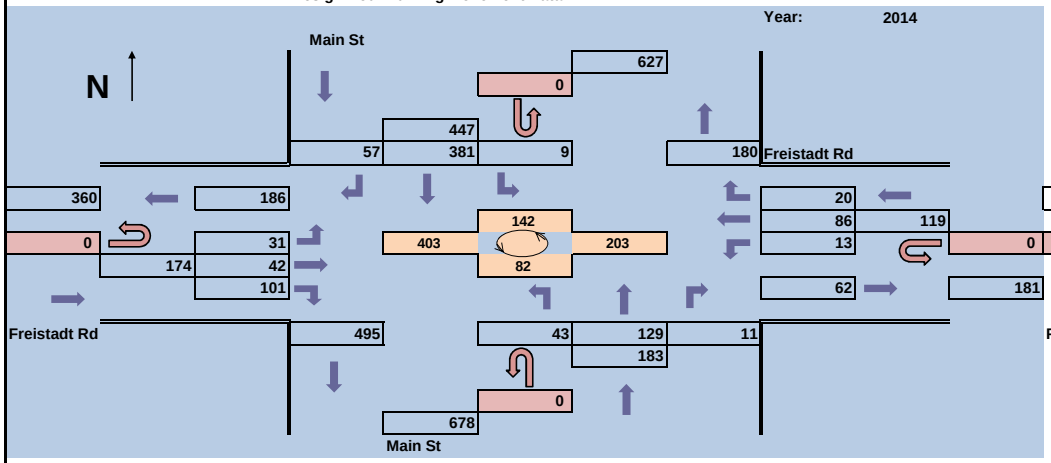

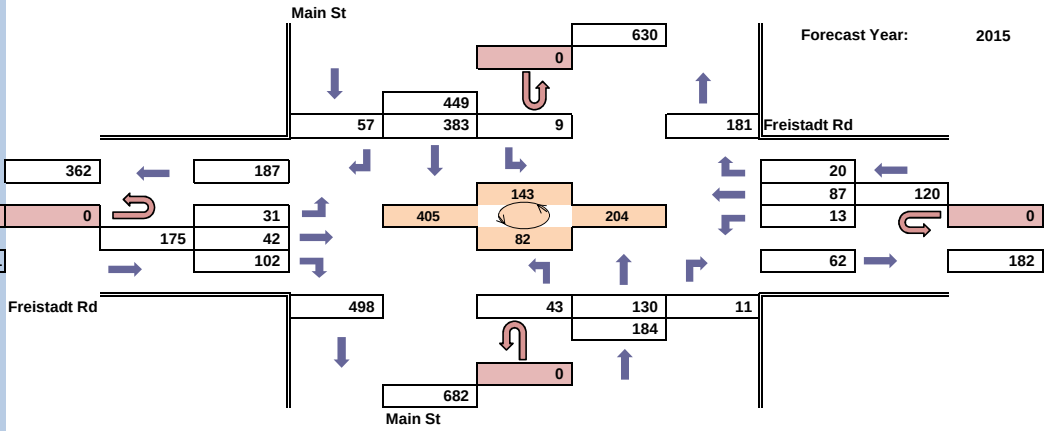

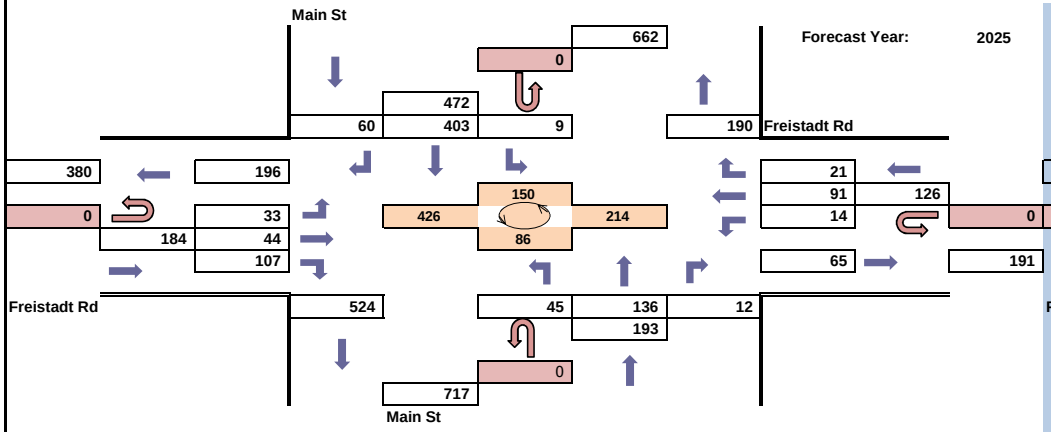

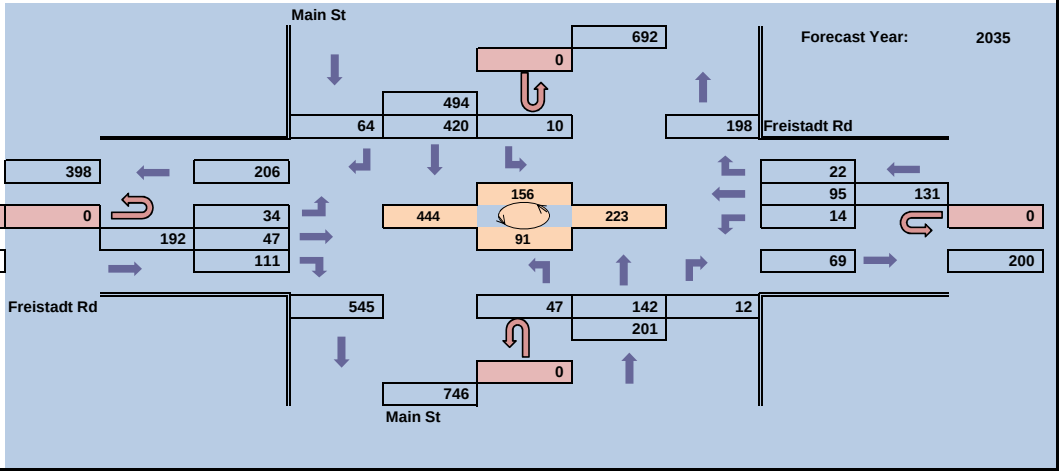

WisDot SE Region

Traffic Forecasting Section
Forecast by: Brent DesRoches
Phone: 262-548-5611
Email: brent.desroches@dot.wi.gov

Projected PM Design Hour Traffic Volumes

No Development

Design Hour: 4:30-5:30pm

Forecast Completed: 29 April 2014

Project Description

Project ID: 2697-00-75
Location: Division Rd to Heidel Rd
Route: Main St
Region/County: Ozaukee

Design Hour Turning Movement Data

Year: 2014

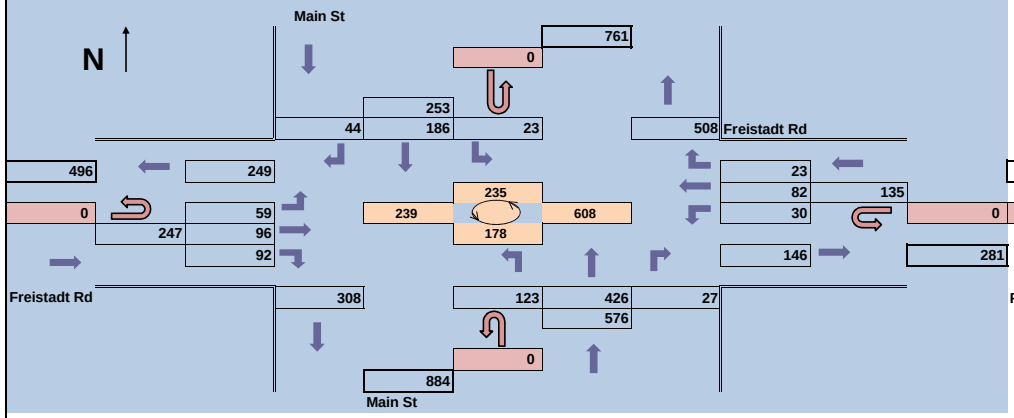

Forecast Year: 2015

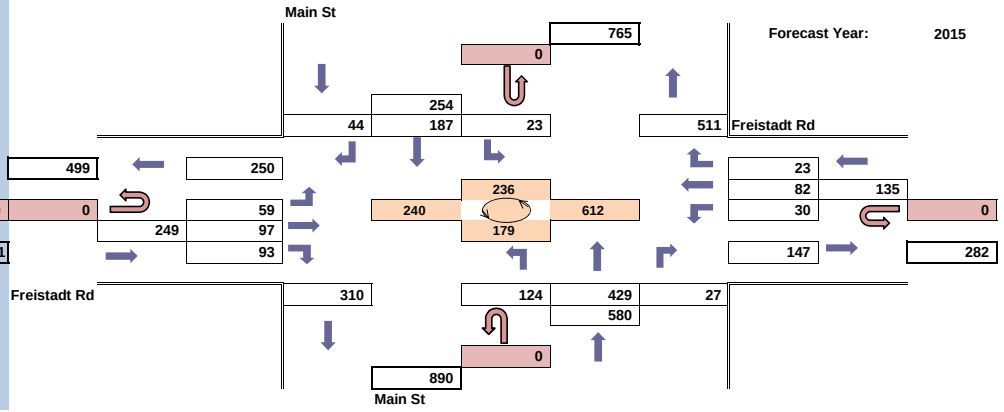

Forecast Year: 2025

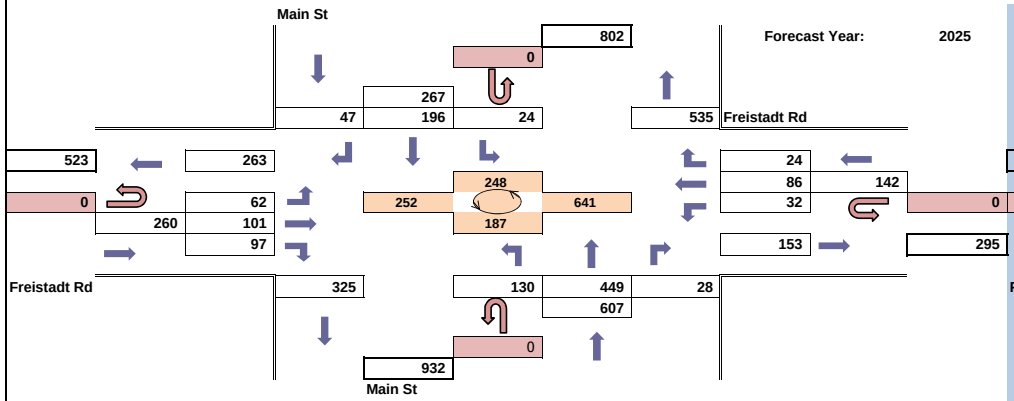

Forecast Year: 2035

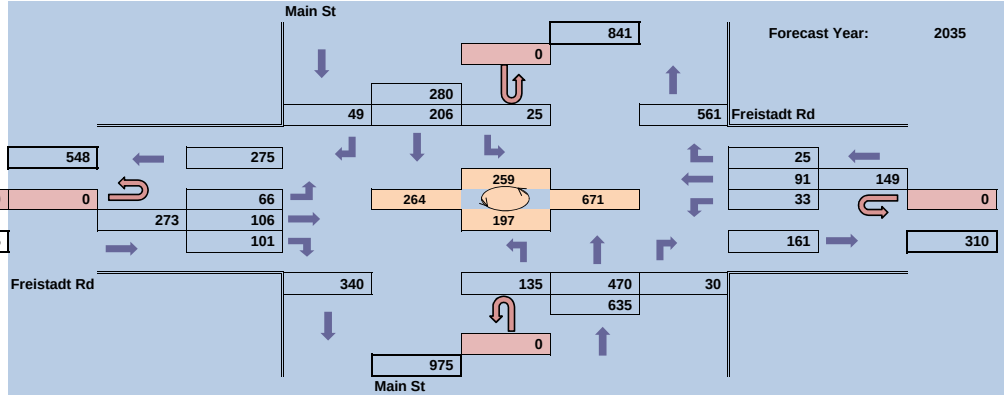

WisDot SE Region
Traffic Forecasting Section
Forecast by: Brent DesRoches
Phone: 262-548-5611
Email: brent.desroches@dot.wi.gov

Projected AM Design Hour Traffic Volumes

No Development

Design Hour: 7:00-8:00am

Forecast Completed: 29 April 2014

Project Description

Project ID: 2697-00-75
Location: Division Rd to Heidel Rd
Route: Main St
Region/County: Ozaukee

Design Hour Turning Movement Data

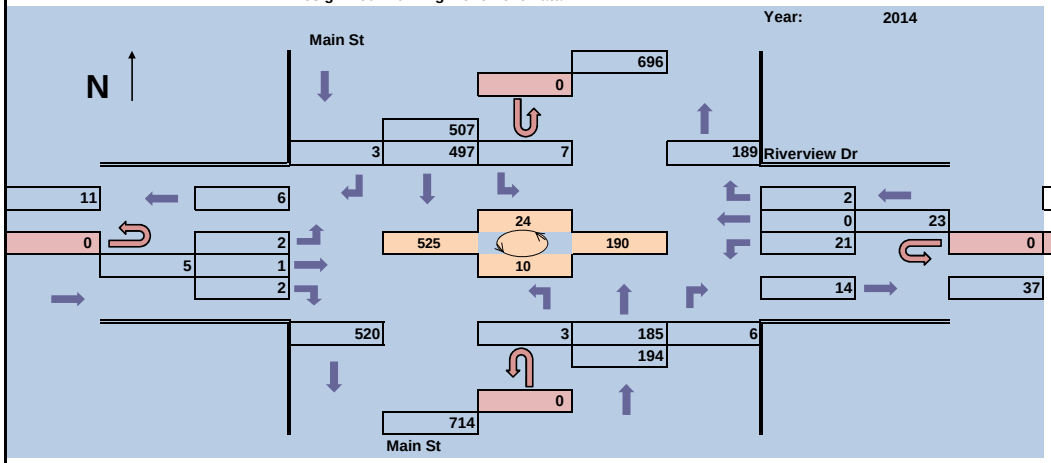

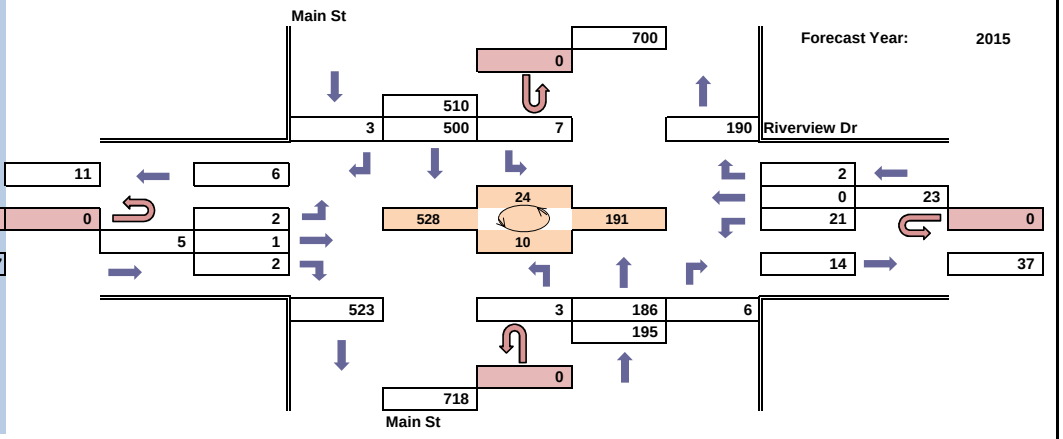

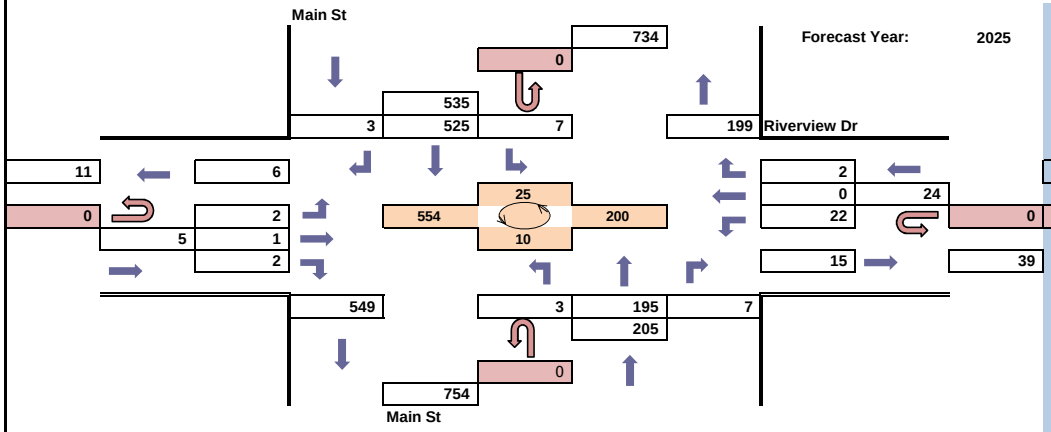

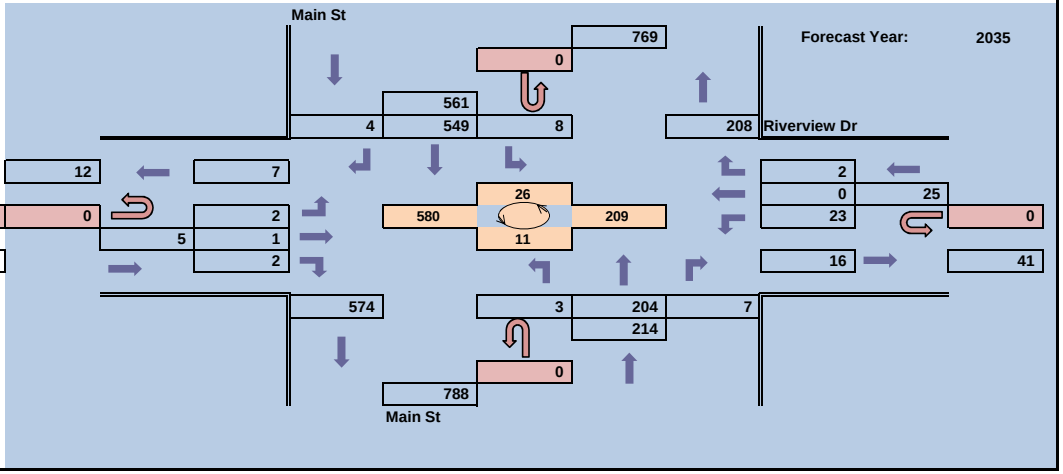

WisDot SE Region

Traffic Forecasting Section
Forecast by: Brent DesRoches
Phone: 262-548-5611
Email: brent.desroches@dot.wi.gov

Projected PM Design Hour Traffic Volumes

No Development

Design Hour: 4:30-5:30pm

Forecast Completed: 29 April 2014

Project Description

Project ID: 2697-00-75
Location: Division Rd to Heidel Rd
Route: Main St
Region/County: Ozaukee

Design Hour Turning Movement Data

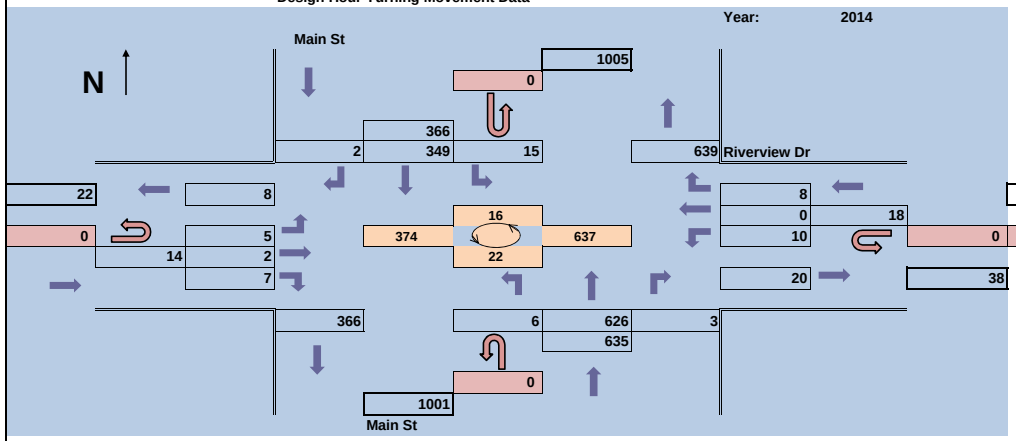

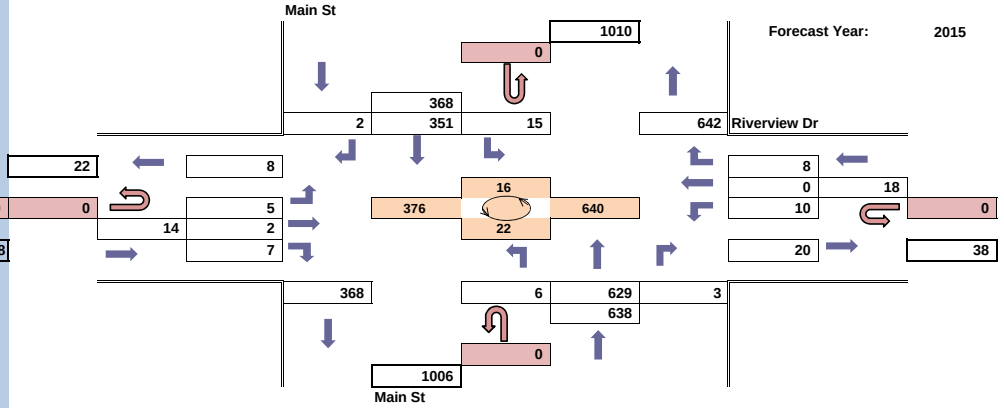

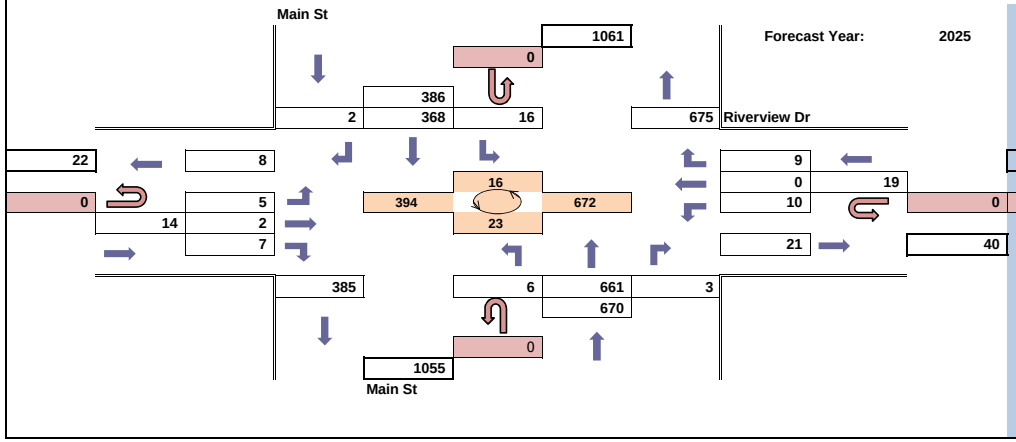

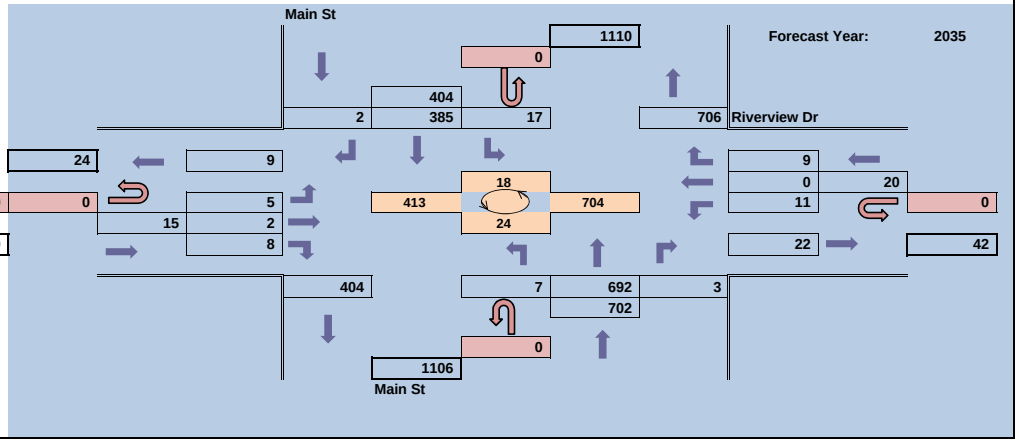

WisDot SE Region
Traffic Forecasting Section
Forecast by: Brent DesRoches
Phone: 262-548-5611
Email: brent.desroches@dot.wi.gov

Projected AM Design Hour Traffic Volumes

No Development

Design Hour: 7:00-8:00am

Forecast Completed: 29 April 2014

Project Description

Project ID: 2697-00-75
Location: Division Rd to Heidel Rd
Route: Main St
Region/County: Ozaukee

Design Hour Turning Movement Data

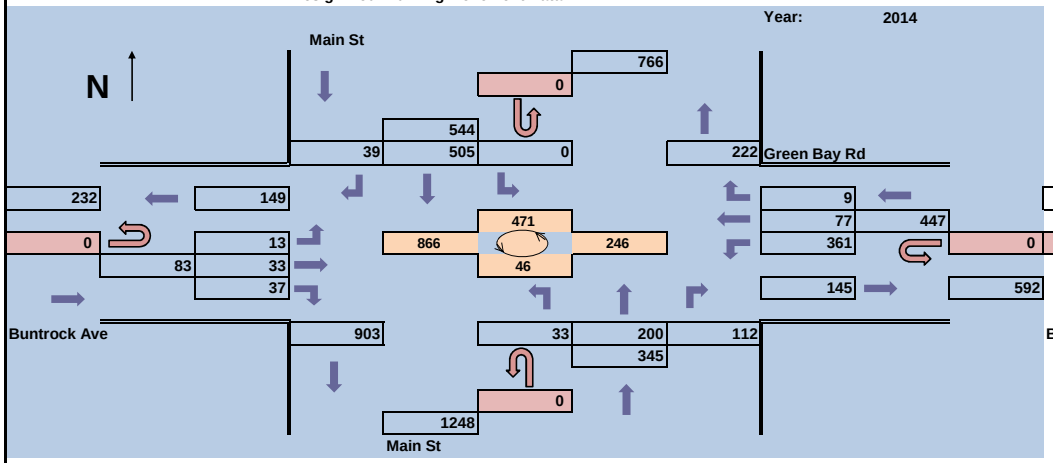

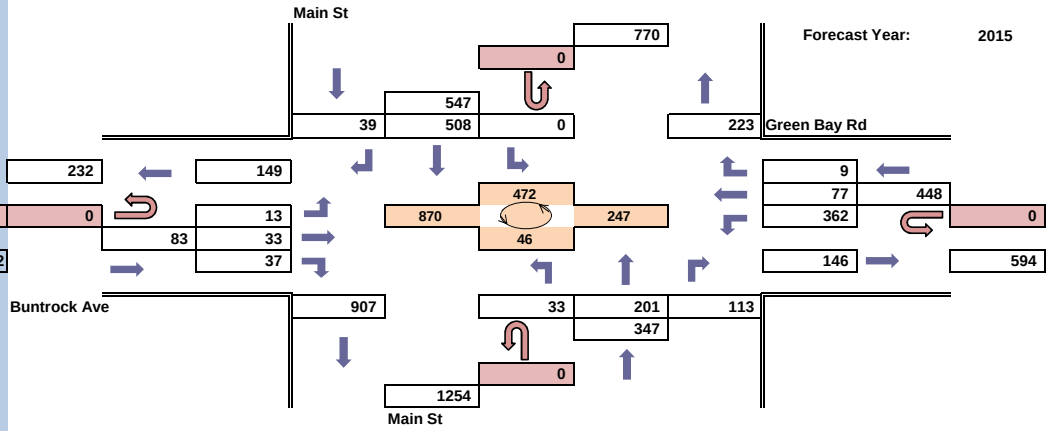

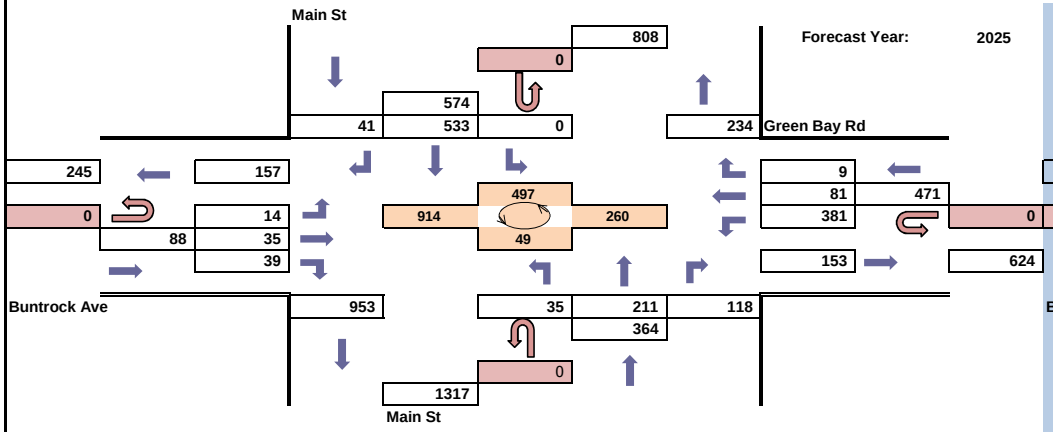

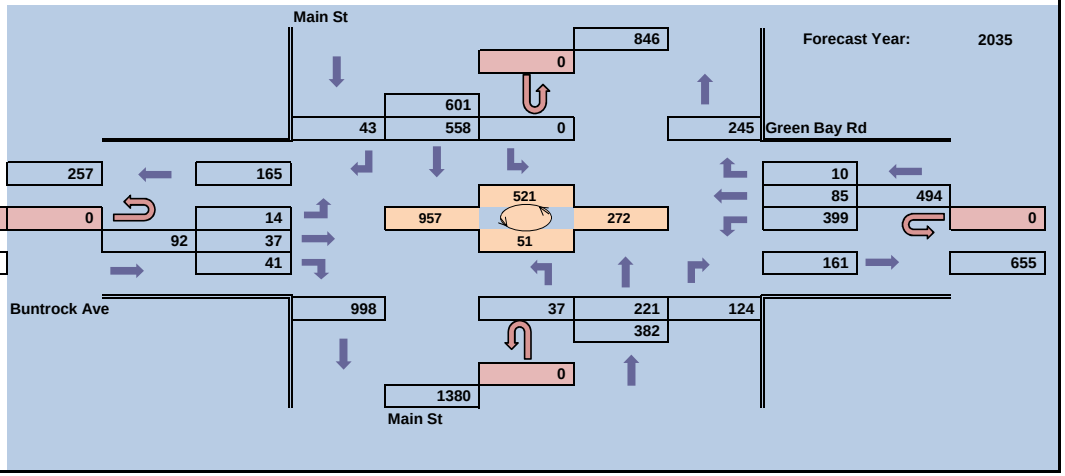

WisDot SE Region

Traffic Forecasting Section
Forecast by: Brent DesRoches
Phone: 262-548-5611
Email: brent.desroches@dot.wi.gov

Projected PM Design Hour Traffic Volumes

No Development

Design Hour: 4:30-5:30pm

Forecast Completed: 29 April 2014

Project Description

Project ID: 2697-00-75
Location: Division Rd to Heidel Rd
Route: Main St
Region/County: Ozaukee

Design Hour Turning Movement Data

Year: 2014

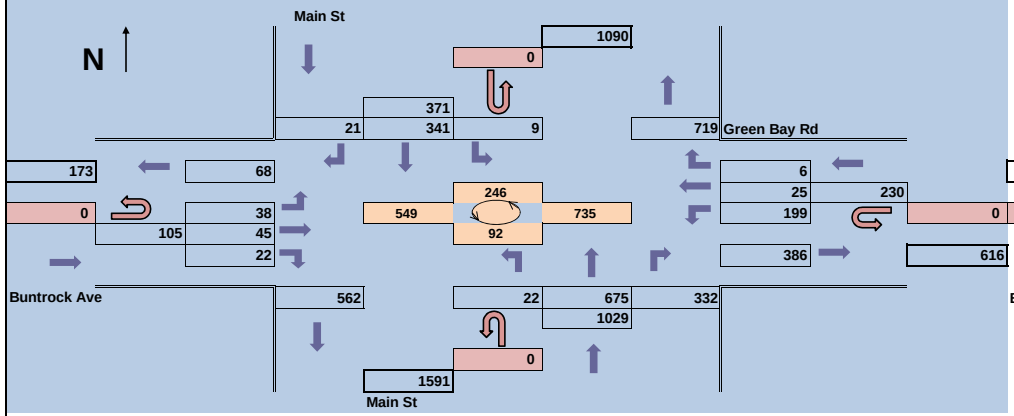

Forecast Year: 2015

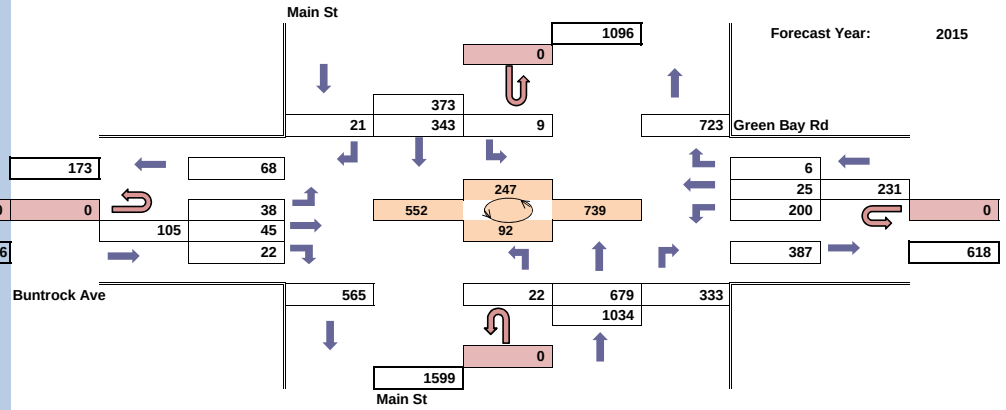

Forecast Year: 2025

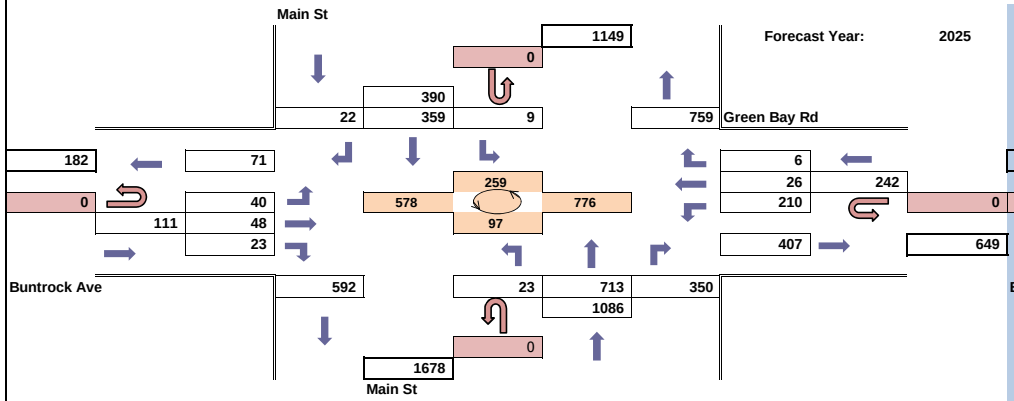

Forecast Year: 2035

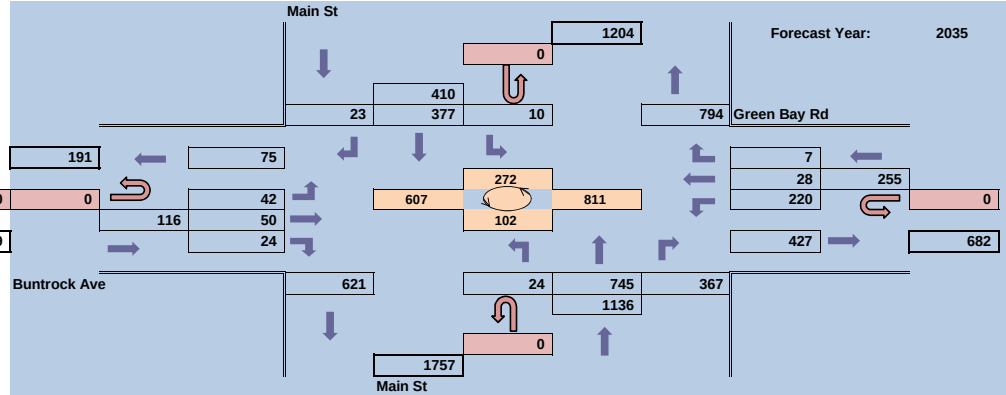

WisDot SE Region
Traffic Forecasting Section
Forecast by: Brent DesRoches
Phone: 262-548-5611
Email: brent.desroches@dot.wi.gov

Projected AM Design Hour Traffic Volumes

No Development

Design Hour: 7:00-8:00am

Forecast Completed: 29 April 2014

Project Description

Project ID: 2697-00-75
Location: Division Rd to Heidel Rd
Route: Main St
Region/County: Ozaukee

Design Hour Turning Movement Data

Year: 2014

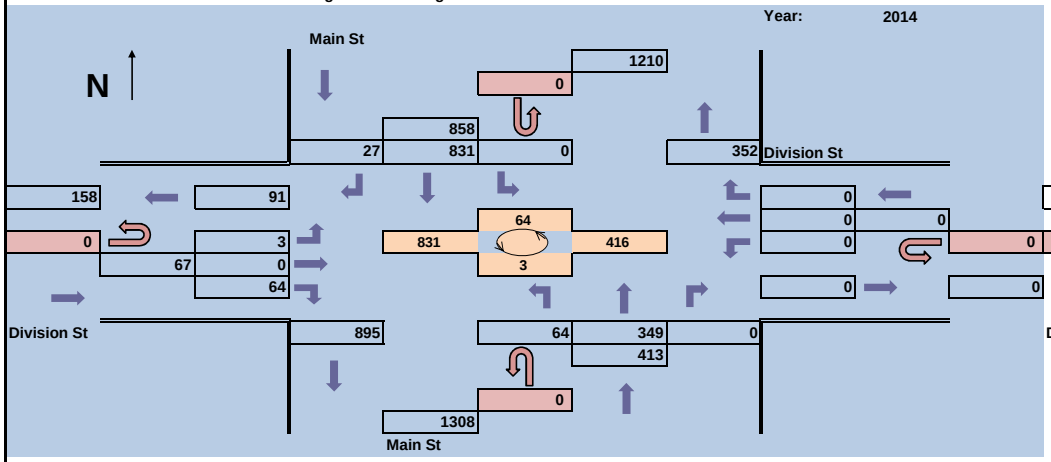

Forecast Year: 2015

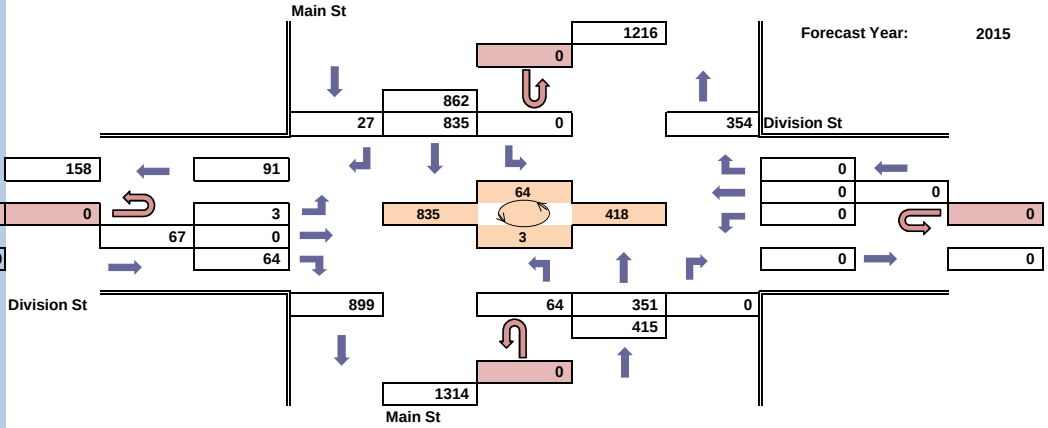

Forecast Year: 2025

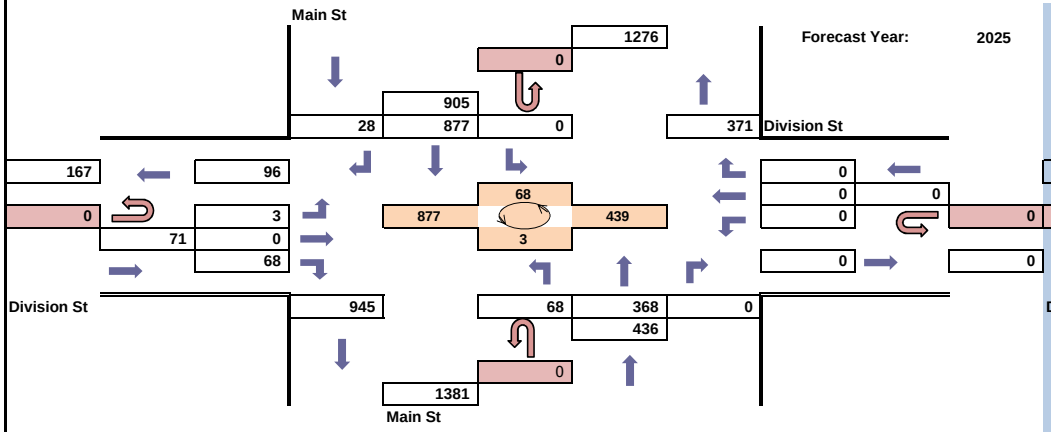

Forecast Year: 2035

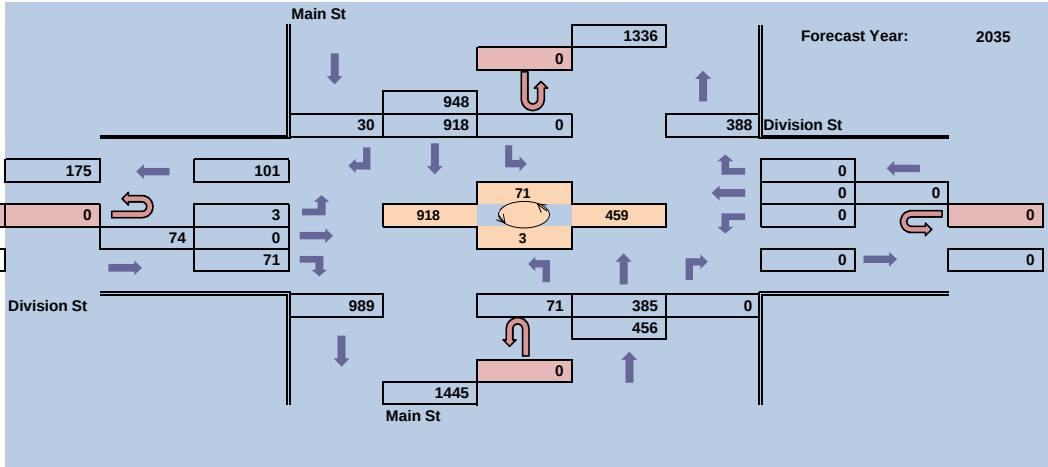

WisDot SE Region

Traffic Forecasting Section
Forecast by: Brent DesRoches
Phone: 262-548-5611
Email: brent.desroches@dot.wi.gov

Projected PM Design Hour Traffic Volumes

No Development

Design Hour: 4:30-5:30pm

Forecast Completed: 29 April 2014

Project Description

Project ID: 2697-00-75
Location: Division Rd to Heidel Rd
Route: Main St
Region/County: Ozaukee

Design Hour Turning Movement Data

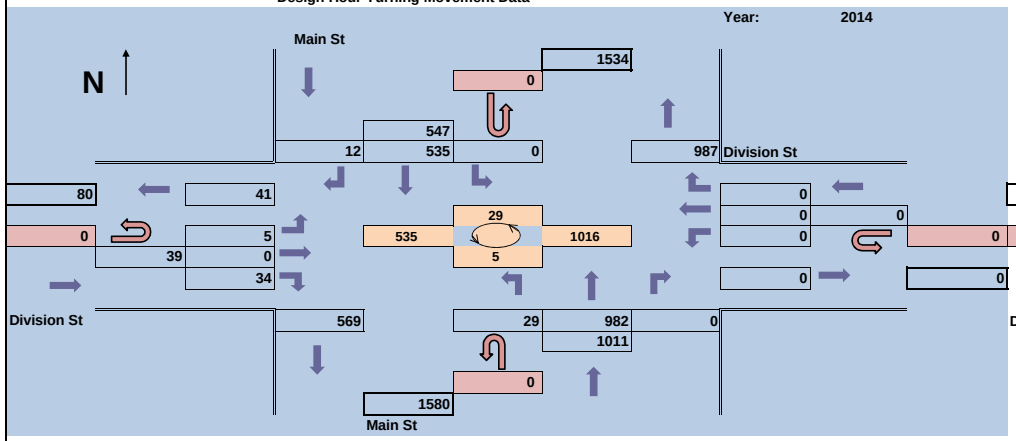

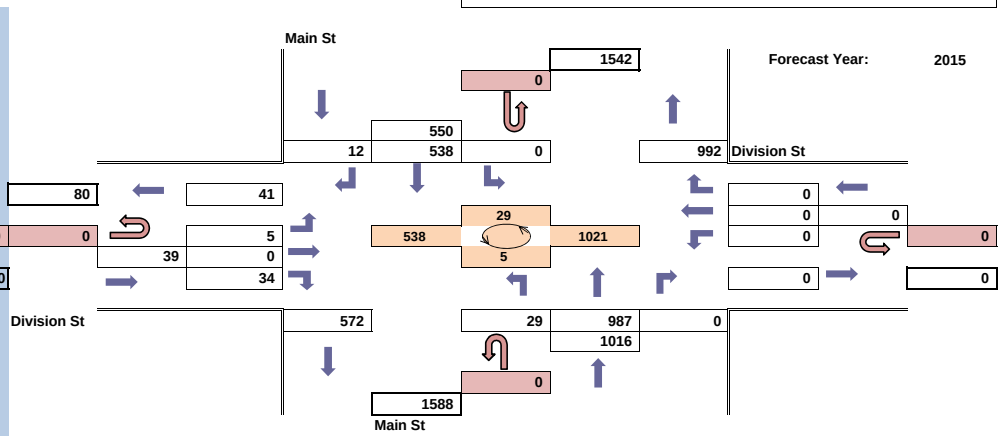

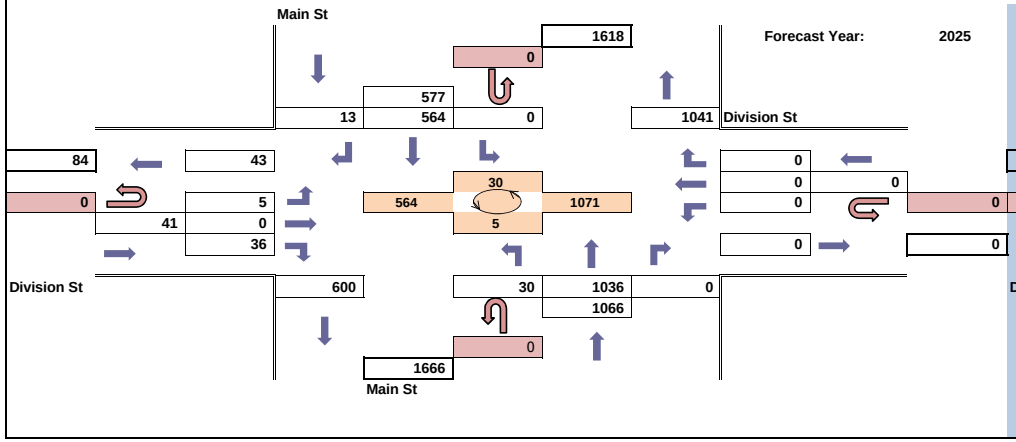

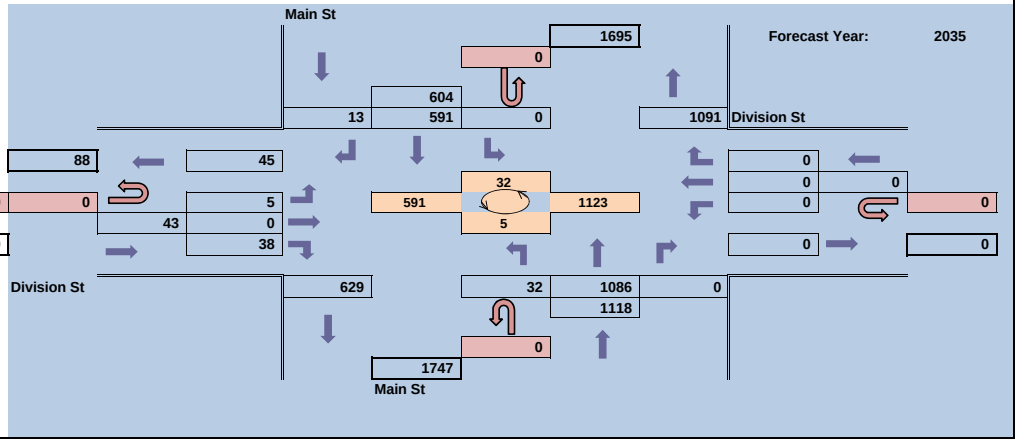

WisDOT TRAFFIC FORECAST REPORT

PROJECT ID(S):	2697-00-75
ROUTE(S):	Main St
Region/COUNTY(IES):	Ozaukee
LOCATION:	Division to Heidel
COMPLETED:	30 April 2014

Developed by: Brent DesRoches
Phone: (262) 548-5611
FAX #: (262) 548-4425
E-Mail: brent.desroches@dot.wi.gov

Design Values (%)

Sites:	450462		
Routes:	Main St		
Volumes:	17910		
K250	10.1		
K100	10.9		
K30	11.4		
P	12.6		
D(Dsgn. Hr.)	59/41		
T(DHV)	4.7		
T(PHV)	4.1		

Site IDs are Colored, Bolded, and Underlined

-000-	2013 Count	(000)	2015 AADT
000	2010 Count	[000]	2025 AADT
		000	2035 AADT
		/000/	xxxx AADT

Truck Class Percents

Class	450462		
2D	1.6		
3AX	1.6		
2S1+2S2	0.7		
3-S2	1.3		
DBL-BTM	0.3		
TOTAL	5.5%		

NOTES ON THE FORECAST:

1. This projection assumes traffic generators from the Mequon Town Center TIA are present in 2025 and beyond.

2. Truck classification percentages were taken from a table representative of similar facilities and locations throughout the state of Wisconsin.

3. Main St is a Factor Group II (Urban-Other) highway (indicating low to moderate fluctuation in traffic from a seasonal perspective). It is functionally classified as an Urban Principal Arterial (14) for count purposes.

4. 2013 was the most recent year traffic count data was collected at the locations, and 2013 DOT adjustment factors are applied.

With Development

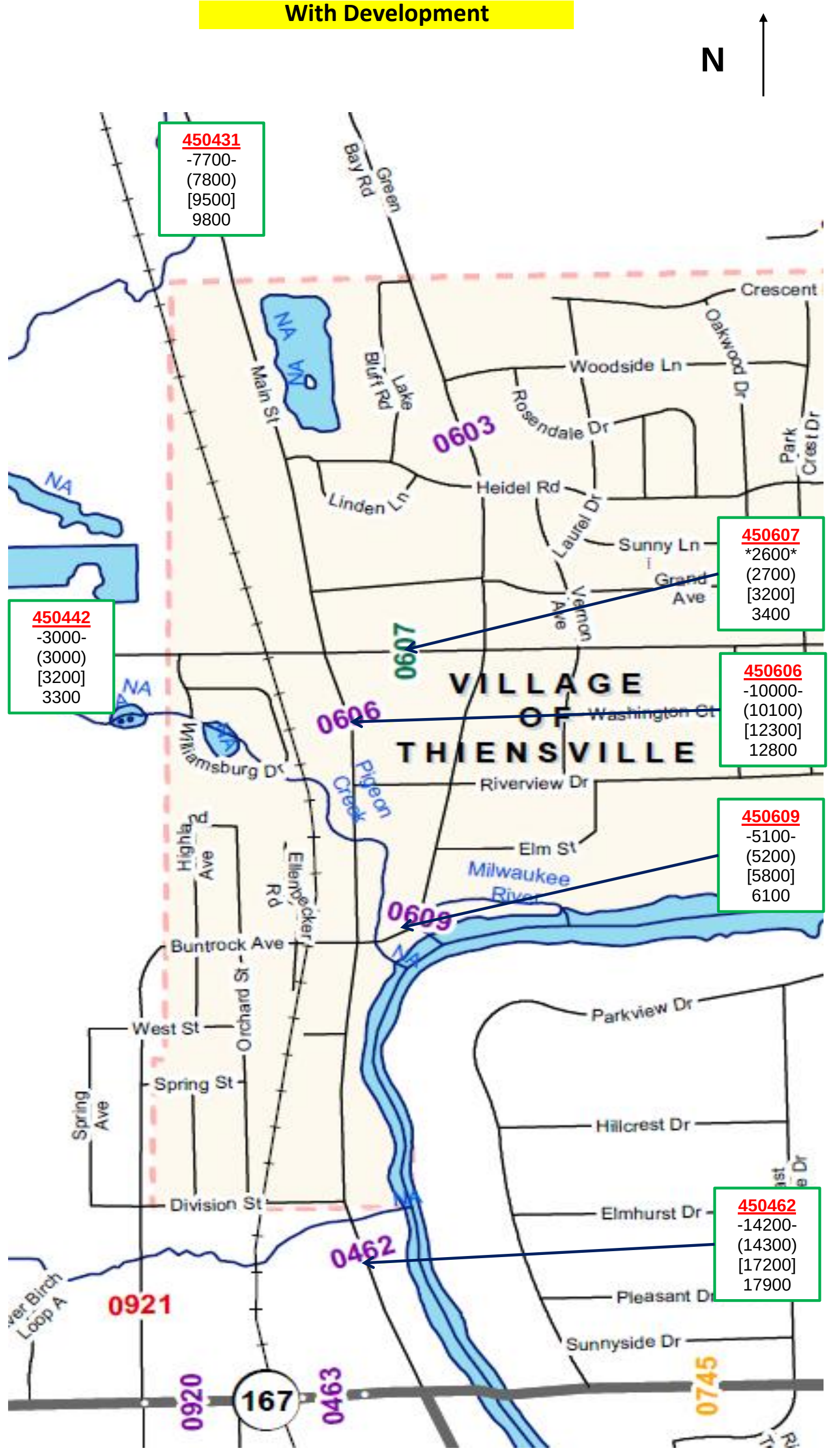

WisDot SE Region
Traffic Forecasting Section
Forecast by: Brent DesRoches
Phone: 262-548-5611
Email: brent.desroches@dot.wi.gov

Projected AM Design Hour Traffic Volumes

With Development

Design Hour: 7:00-8:00am

Forecast Completed: 29 April 2014

Project Description

Project ID: 2697-00-75
Location: Division Rd to Heidel Rd
Route: Main St
Region/County: Ozaukee

Design Hour Turning Movement Data

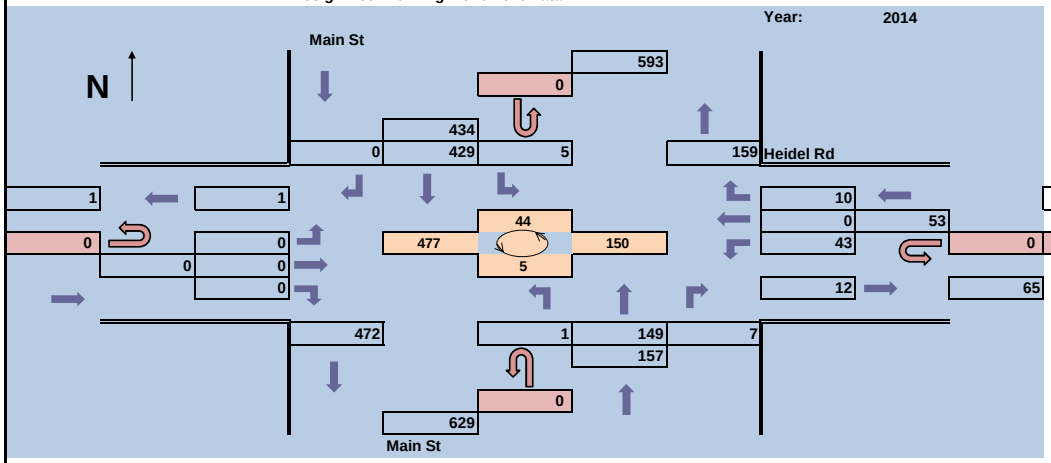

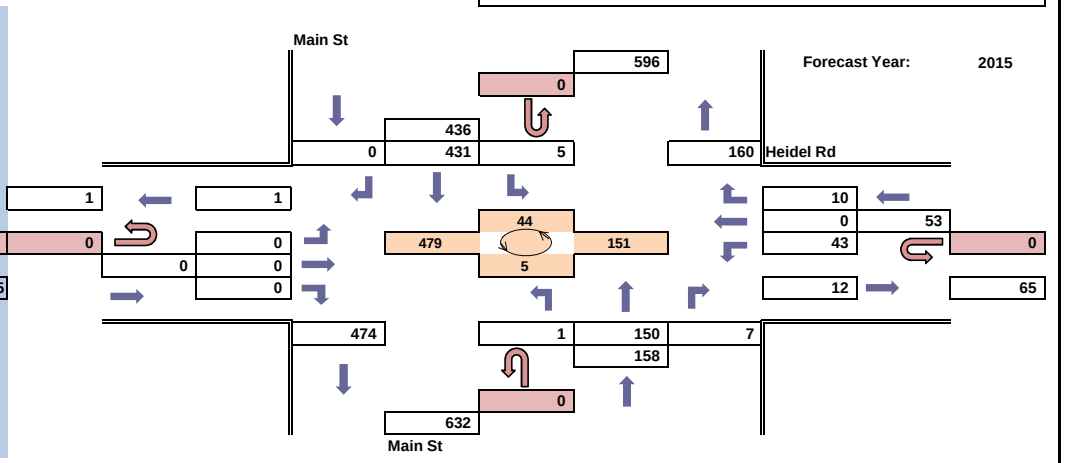

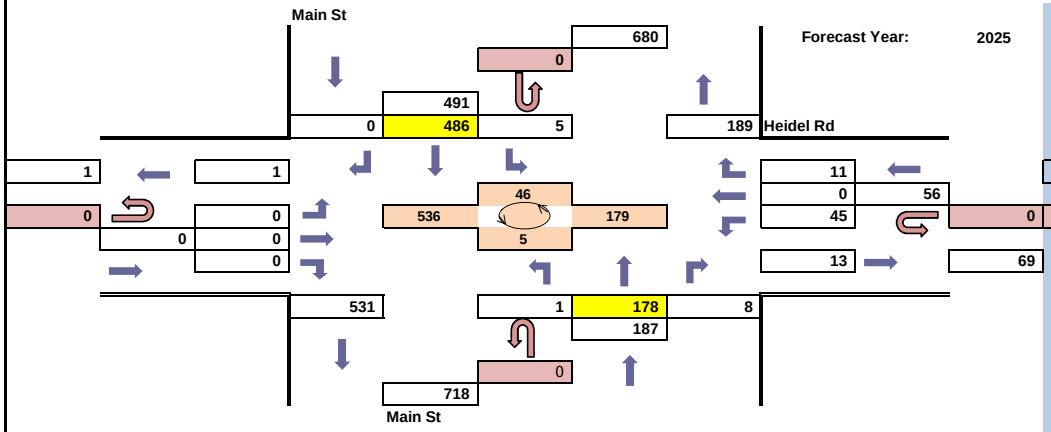

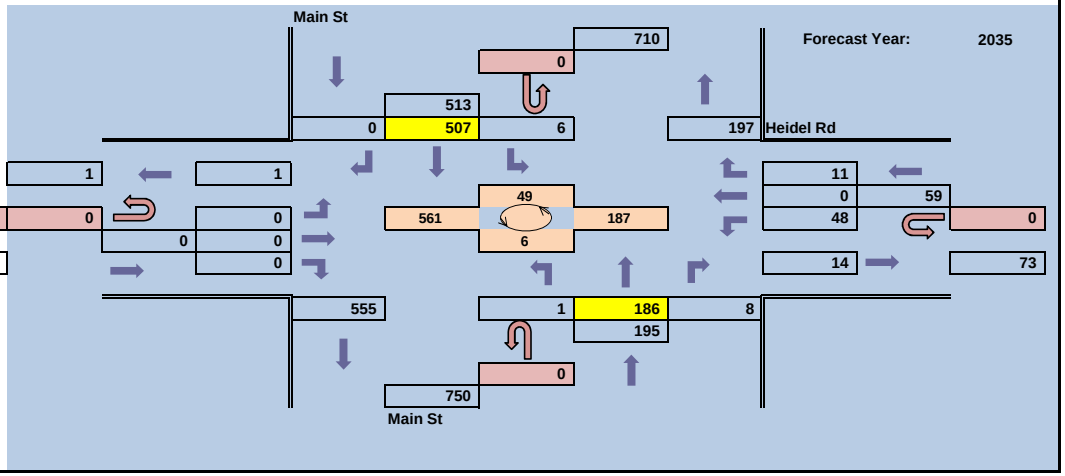

WisDot SE Region

Traffic Forecasting Section
Forecast by: Brent DesRoches
Phone: 262-548-5611
Email: brent.desroches@dot.wi.gov

Projected PM Design Hour Traffic Volumes

With Development

Design Hour: 4:30-5:30pm

Forecast Completed: 29 April 2014

Project Description

Project ID: 2697-00-75
Location: Division Rd to Heidel Rd
Route: Main St
Region/County: Ozaukee

Design Hour Turning Movement Data

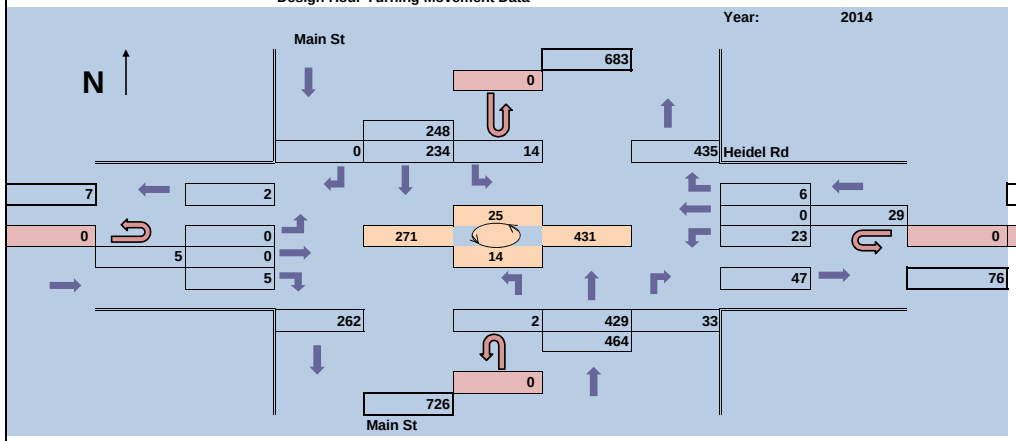

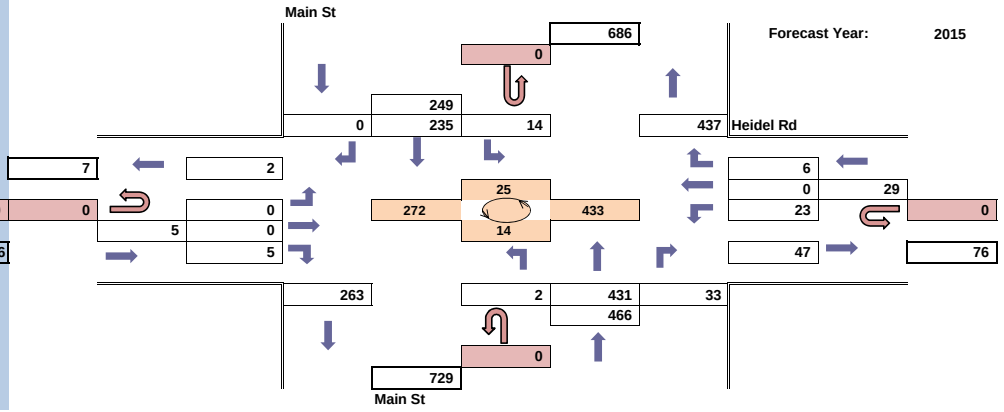

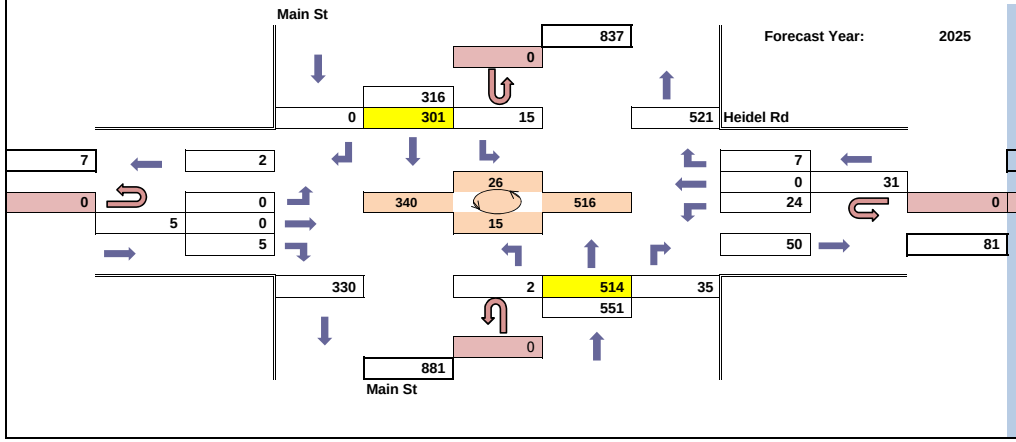

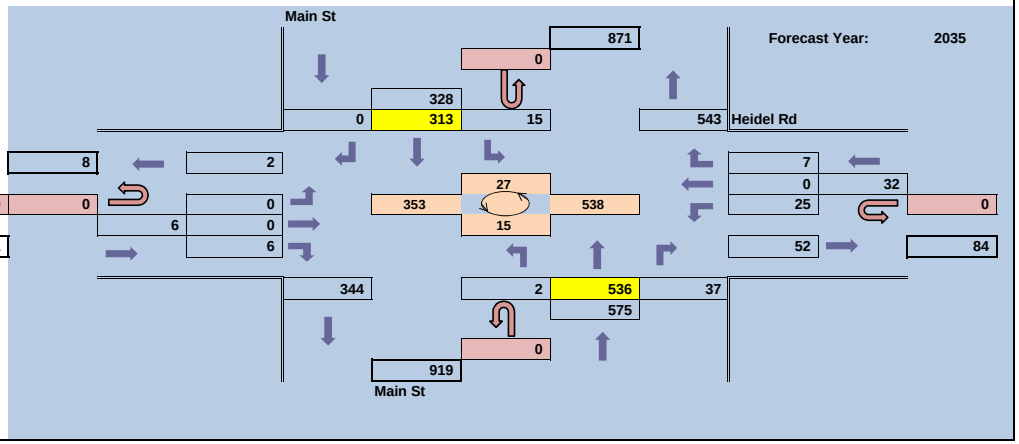

WisDot SE Region
Traffic Forecasting Section
Forecast by: Brent DesRoches
Phone: 262-548-5611
Email: brent.desroches@dot.wi.gov

Projected AM Design Hour Traffic Volumes

With Development

Design Hour: 7:00-8:00am

Forecast Completed: 29 April 2014

Project Description

Project ID: 2697-00-75
Location: Division Rd to Heidel Rd
Route: Main St
Region/County: Ozaukee

Design Hour Turning Movement Data

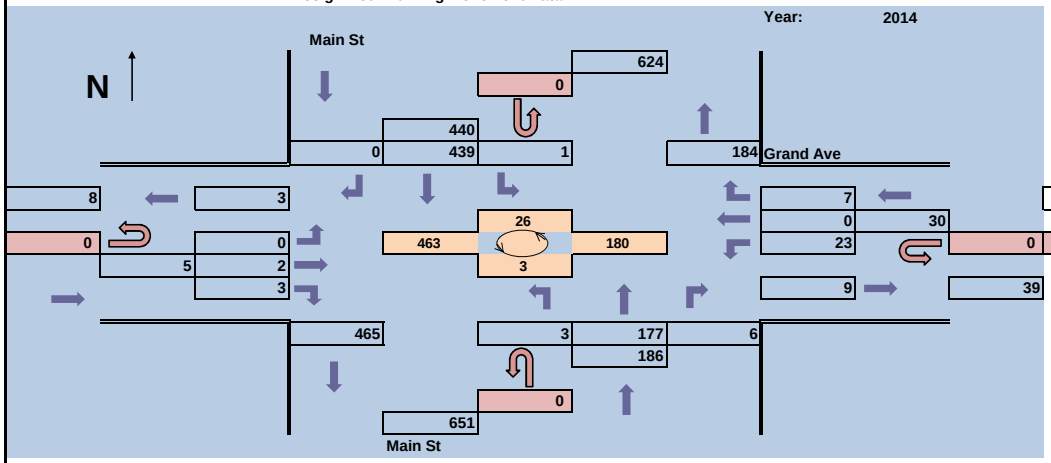

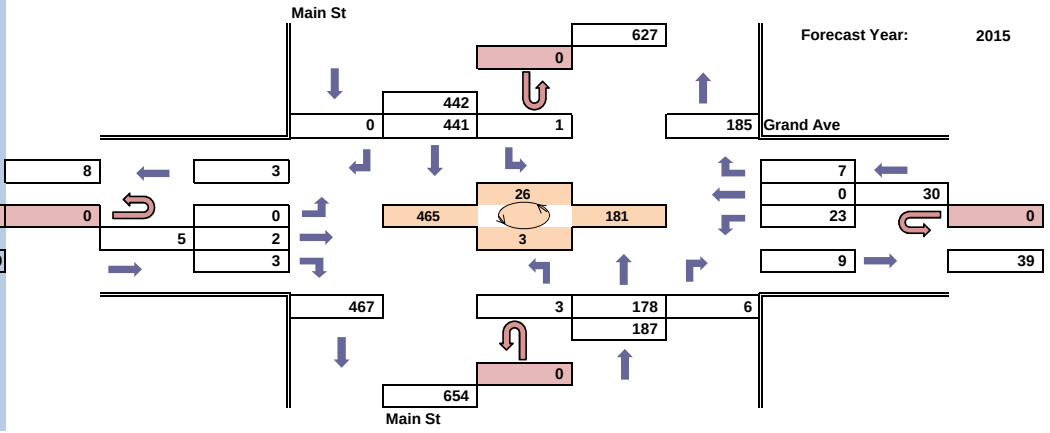

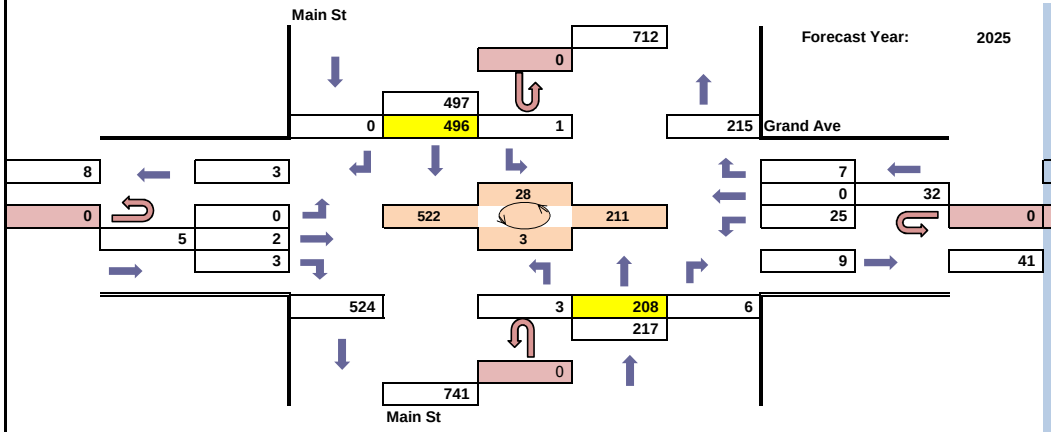

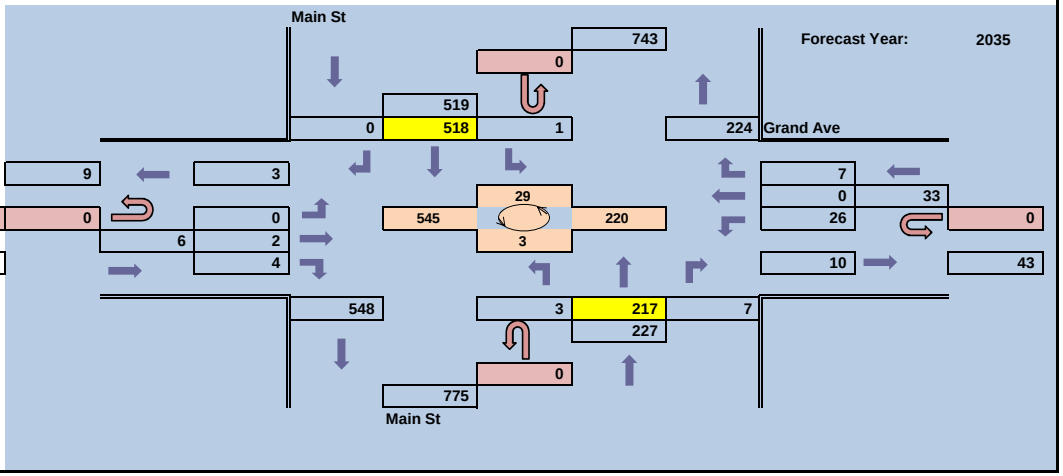

WisDot SE Region

Traffic Forecasting Section
Forecast by: Brent DesRoches
Phone: 262-548-5611
Email: brent.desroches@dot.wi.gov

Projected PM Design Hour Traffic Volumes

With Development

Design Hour: 4:30-5:30pm

Forecast Completed: 29 April 2014

Project Description

Project ID: 2697-00-75
Location: Division Rd to Heidel Rd
Route: Main St
Region/County: Ozaukee

Design Hour Turning Movement Data

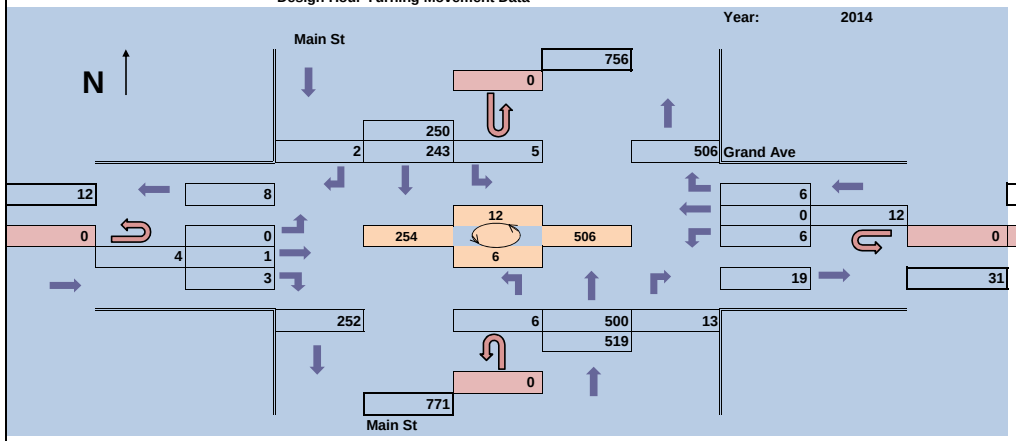

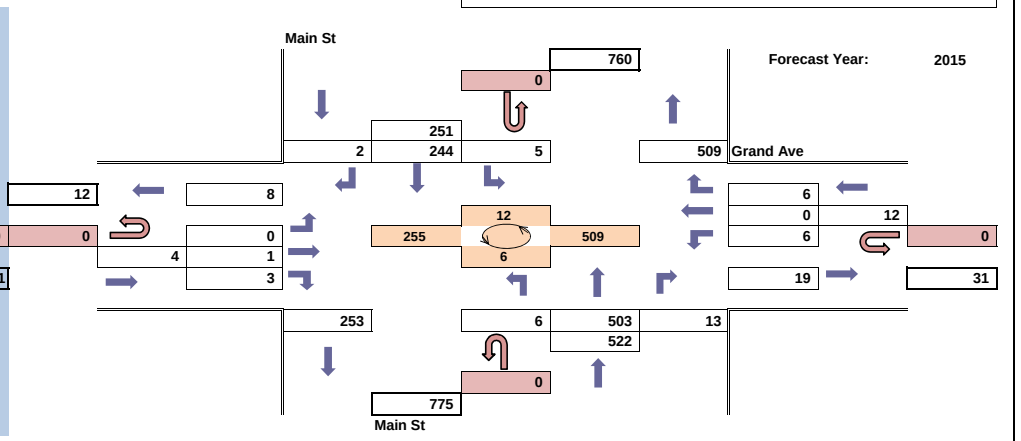

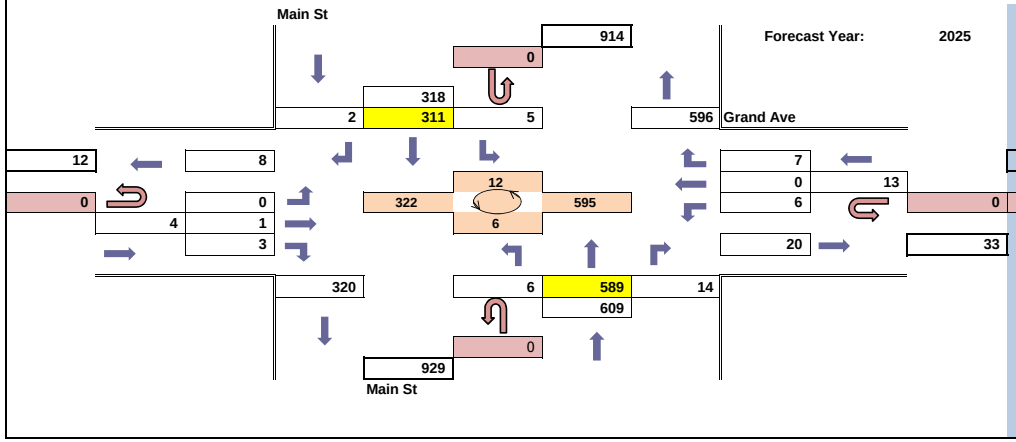

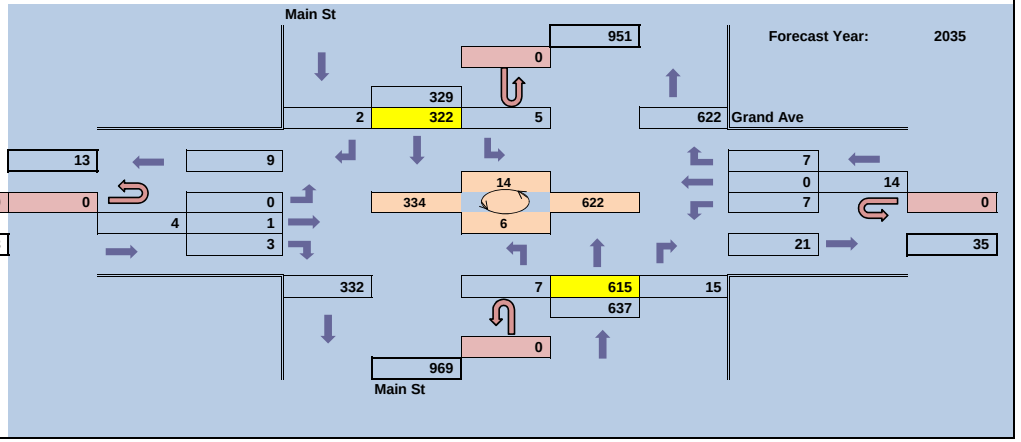

WisDot SE Region
Traffic Forecasting Section
Forecast by: Brent DesRoches
Phone: 262-548-5611
Email: brent.desroches@dot.wi.gov

Projected AM Design Hour Traffic Volumes

With Development

Design Hour: 7:00-8:00am

Forecast Completed: 29 April 2014

Project Description

Project ID: 2697-00-75
Location: Division Rd to Heidel Rd
Route: Main St
Region/County: Ozaukee

Design Hour Turning Movement Data

Year: 2014

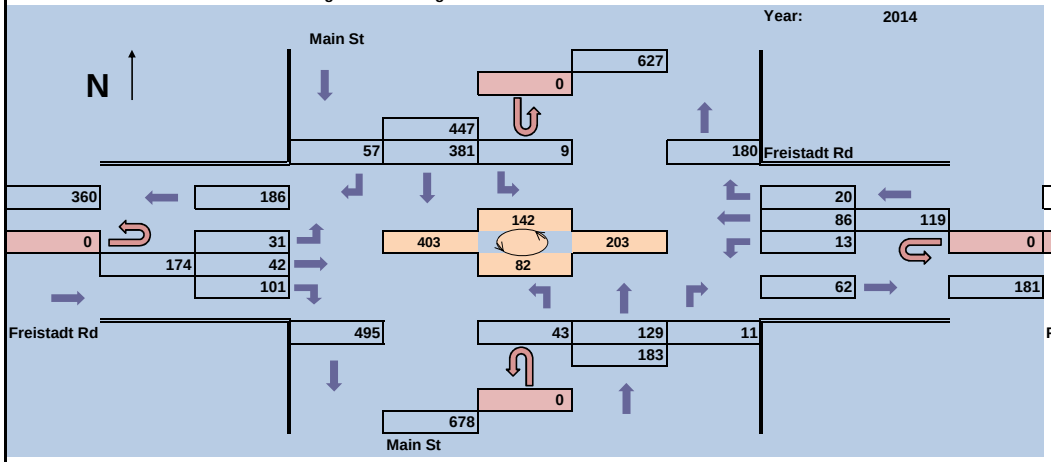

Forecast Year: 2015

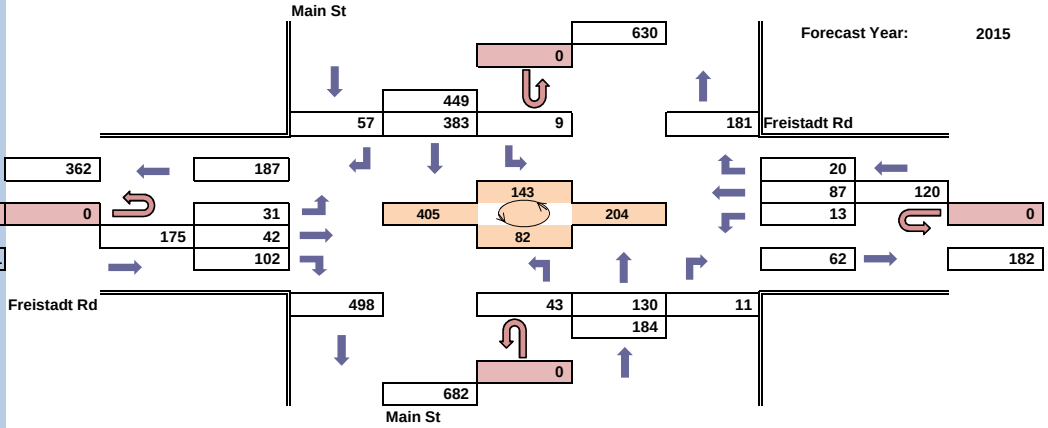

Forecast Year: 2025

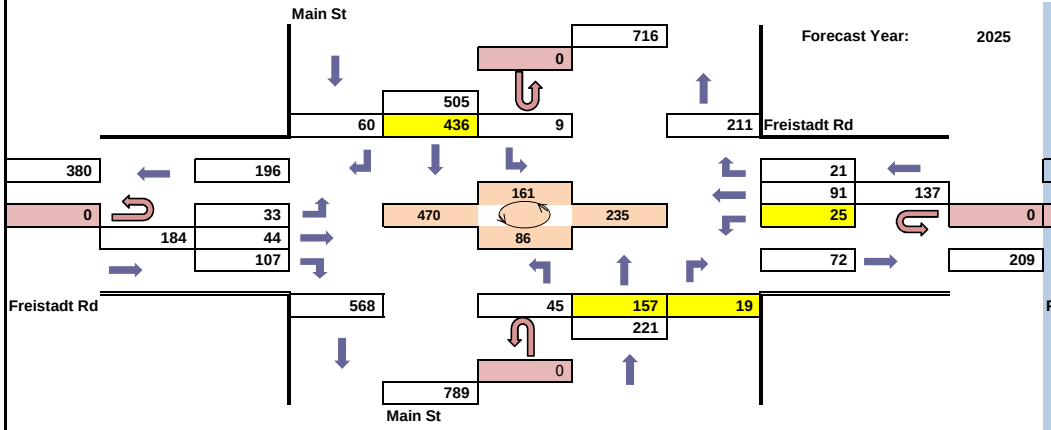

Forecast Year: 2035

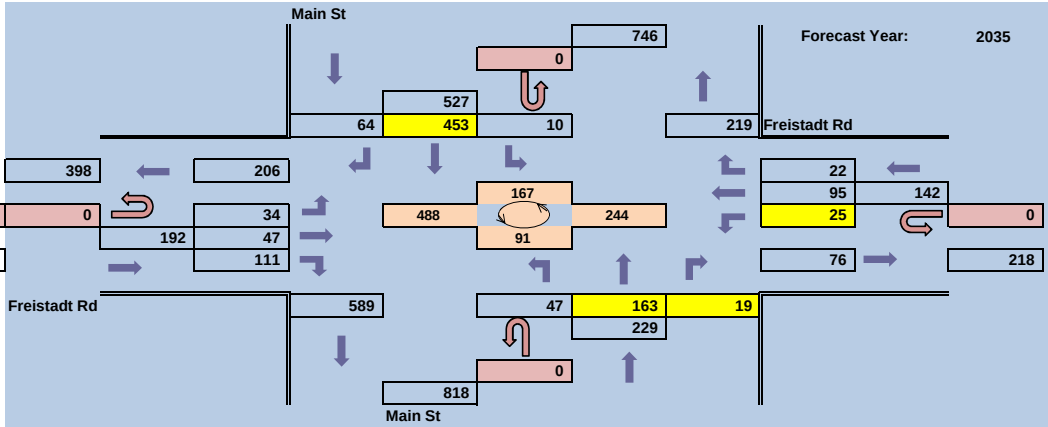

WisDot SE Region

Traffic Forecasting Section
Forecast by: Brent DesRoches
Phone: 262-548-5611
Email: brent.desroches@dot.wi.gov

Projected PM Design Hour Traffic Volumes

With Development

Design Hour: 4:30-5:30pm

Forecast Completed: 29 April 2014

Project Description

Project ID: 2697-00-75
Location: Division Rd to Heidel Rd
Route: Main St
Region/County: Ozaukee

Design Hour Turning Movement Data

Year: 2014

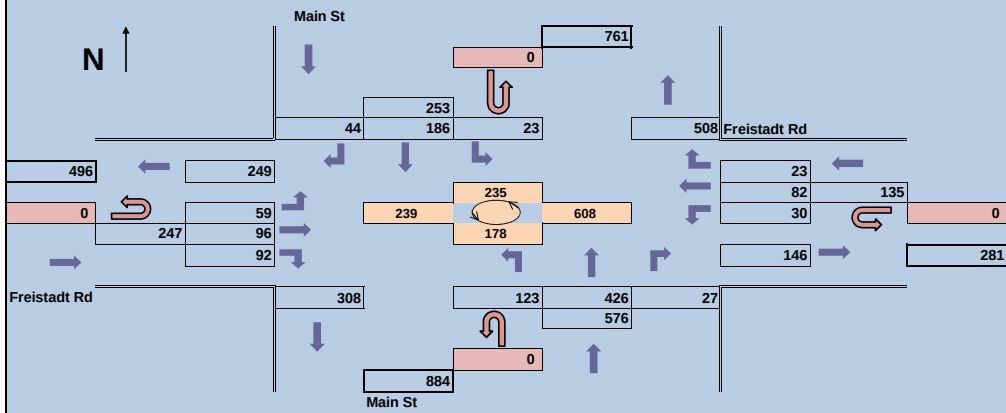

Forecast Year: 2015

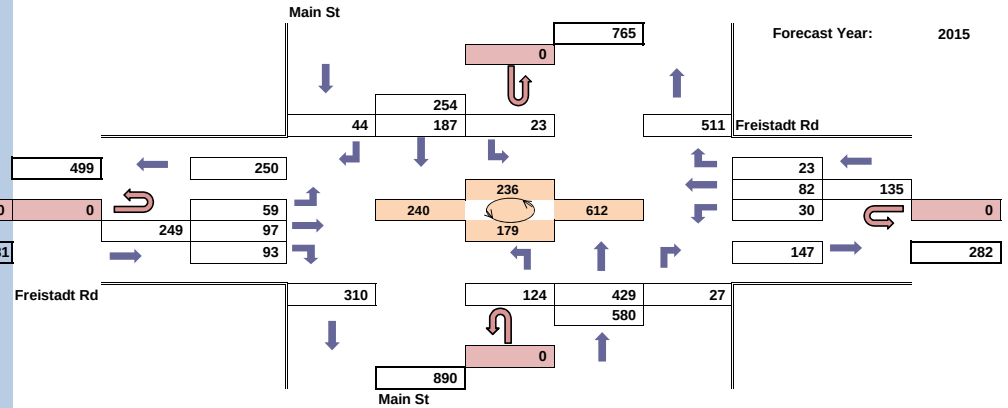

Forecast Year: 2025

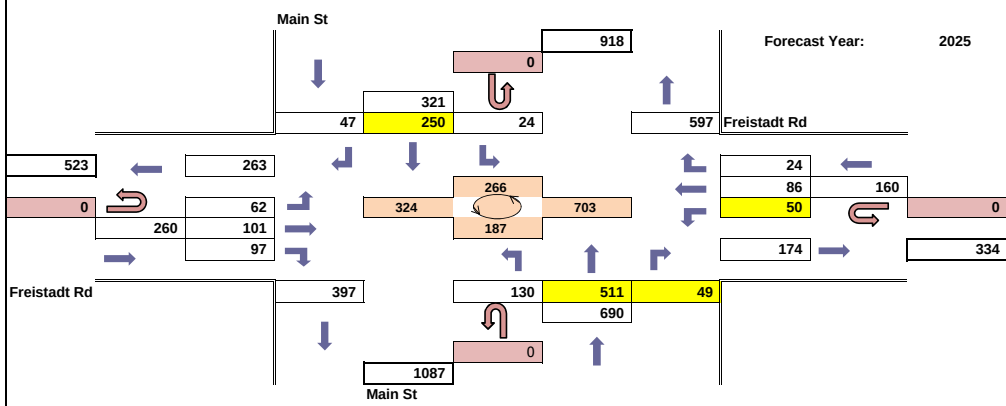

Forecast Year: 2035

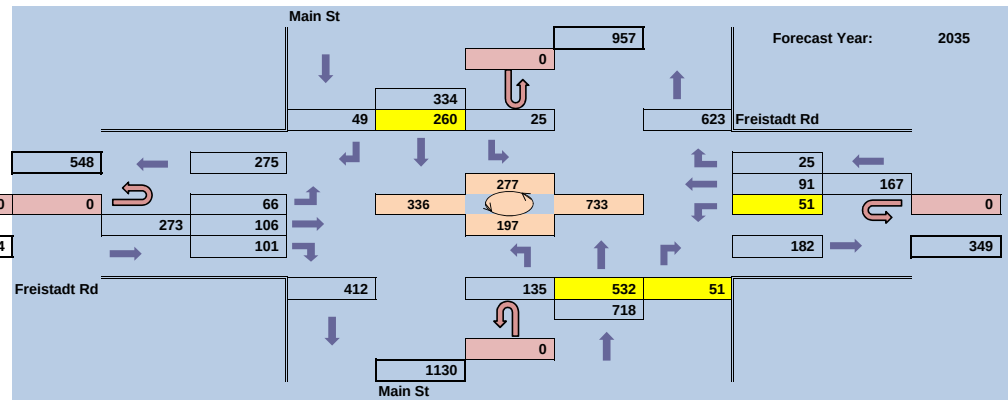

WisDot SE Region
Traffic Forecasting Section
Forecast by: Brent DesRoches
Phone: 262-548-5611
Email: brent.desroches@dot.wi.gov

Projected AM Design Hour Traffic Volumes

With Development

Design Hour: 7:00-8:00am

Forecast Completed: 29 April 2014

Project Description

Project ID: 2697-00-75
Location: Division Rd to Heidel Rd
Route: Main St
Region/County: Ozaukee

Design Hour Turning Movement Data

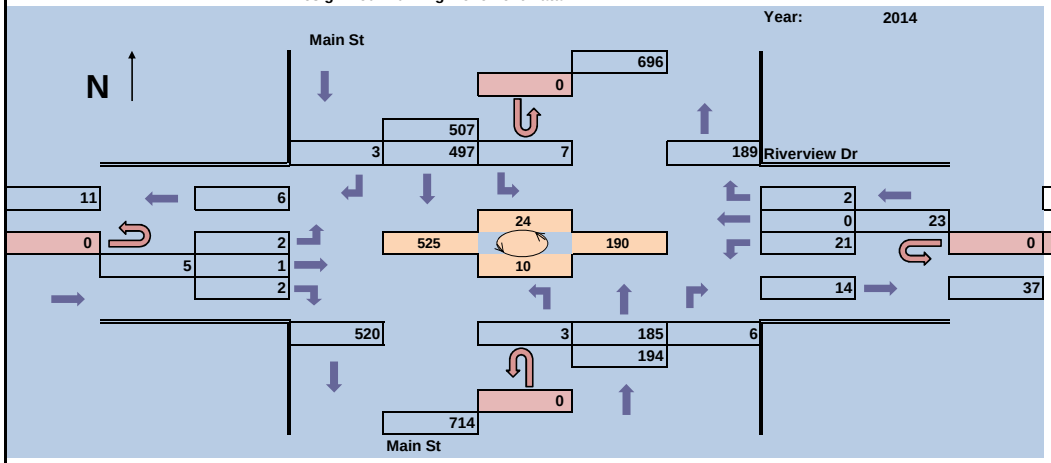

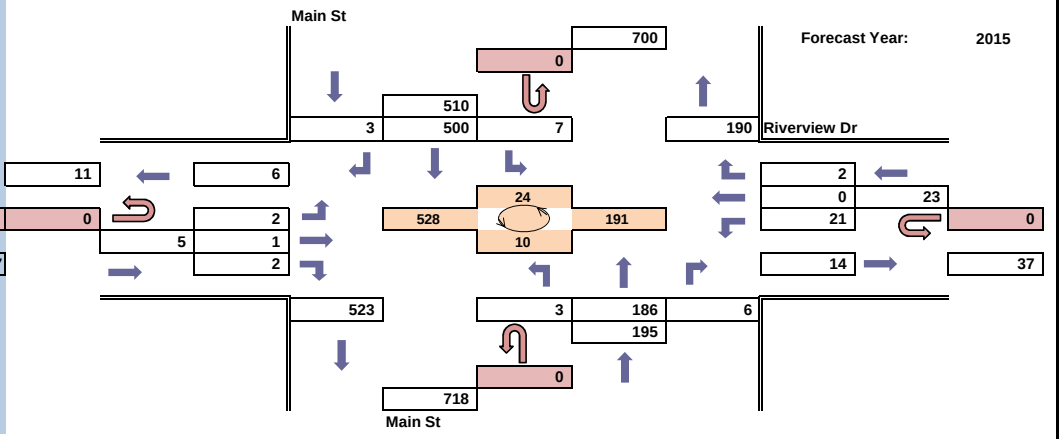

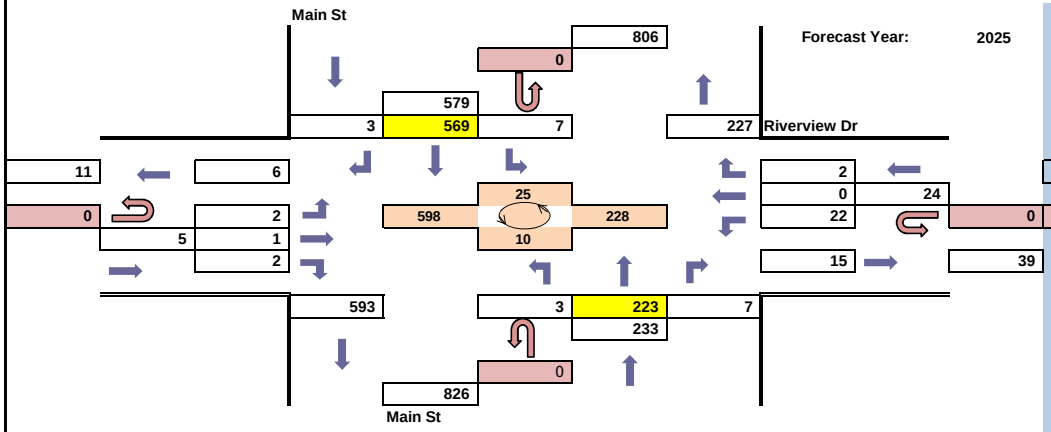

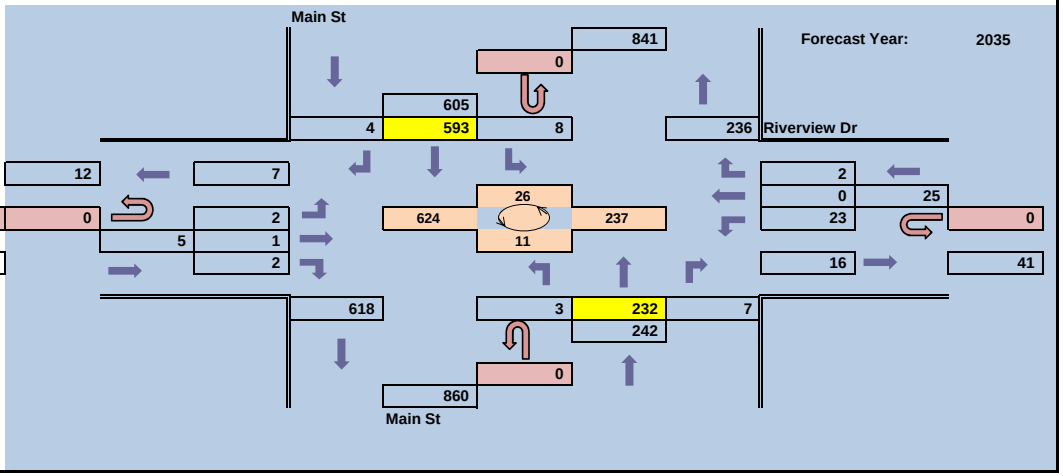

WisDot SE Region

Traffic Forecasting Section
Forecast by: Brent DesRoches
Phone: 262-548-5611
Email: brent.desroches@dot.wi.gov

Projected PM Design Hour Traffic Volumes

With Development

Design Hour: 4:30-5:30pm

Forecast Completed: 29 April 2014

Project Description

Project ID: 2697-00-75
Location: Division Rd to Heidel Rd
Route: Main St
Region/County: Ozaukee

Design Hour Turning Movement Data

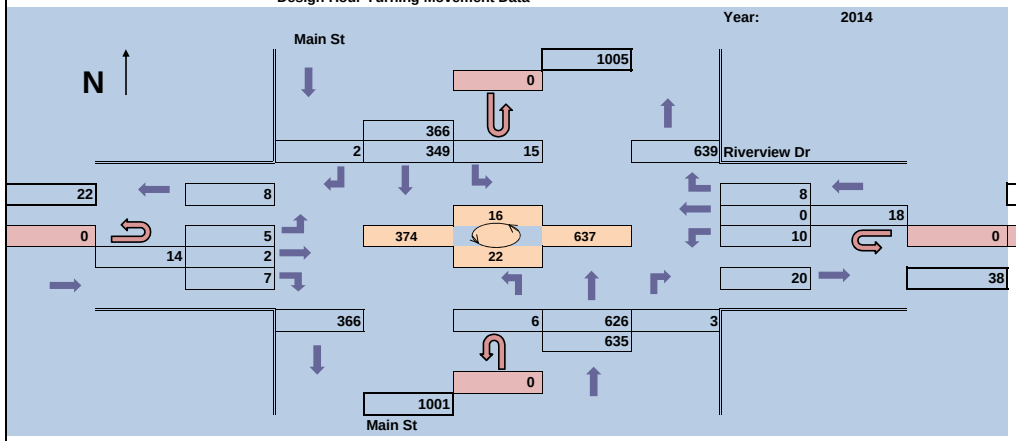

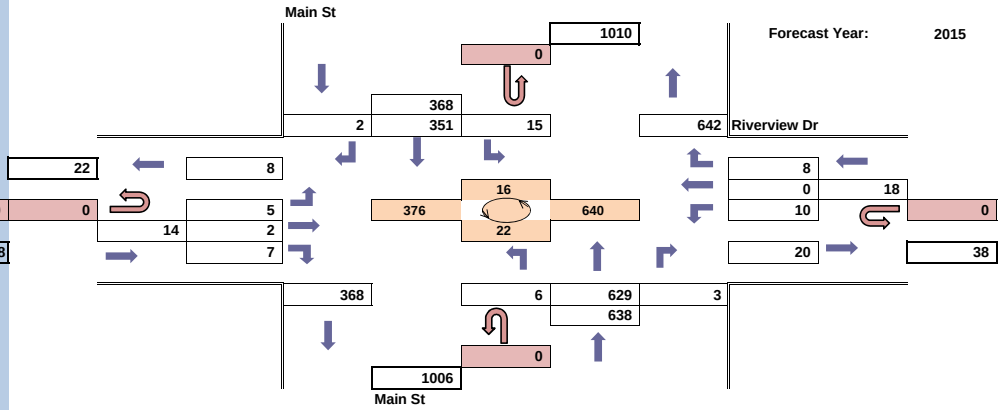

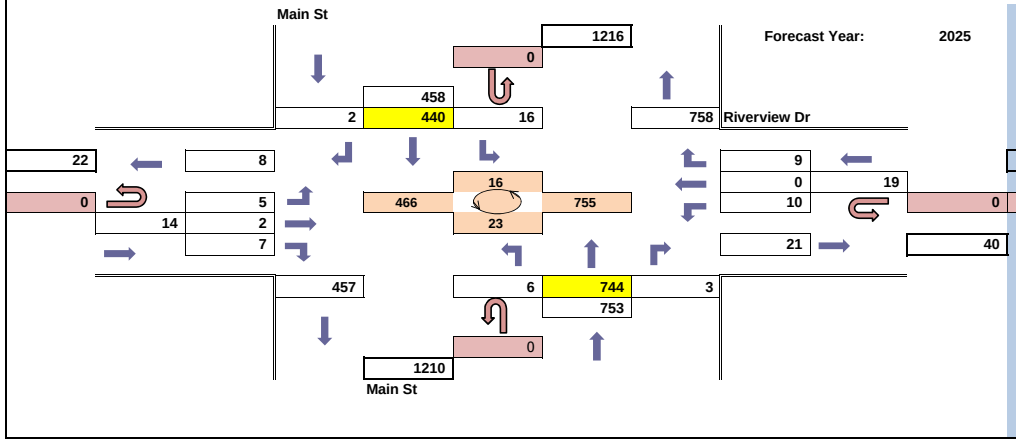

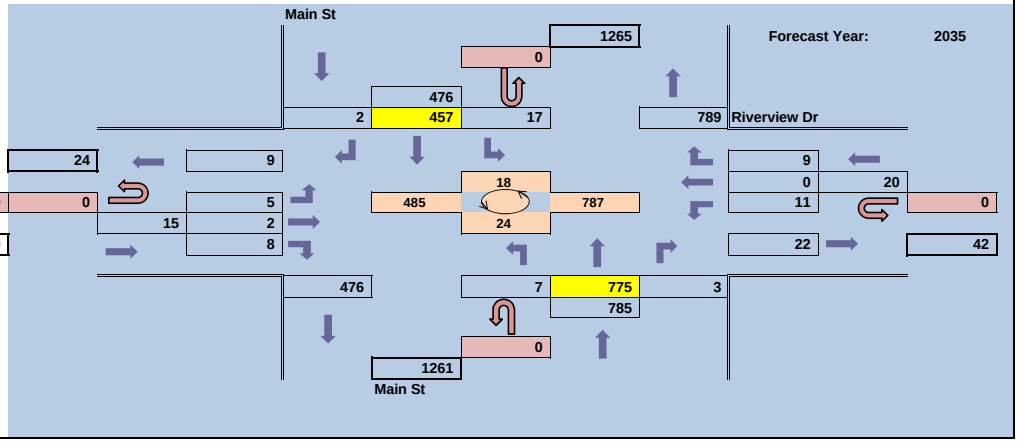

WisDot SE Region
Traffic Forecasting Section
Forecast by: Brent DesRoches
Phone: 262-548-5611
Email: brent.desroches@dot.wi.gov

Projected AM Design Hour Traffic Volumes

With Development

Design Hour: 7:00-8:00am

Forecast Completed: 29 April 2014

Project Description

Project ID: 2697-00-75
Location: Division Rd to Heidel Rd
Route: Main St
Region/County: Ozaukee

Design Hour Turning Movement Data

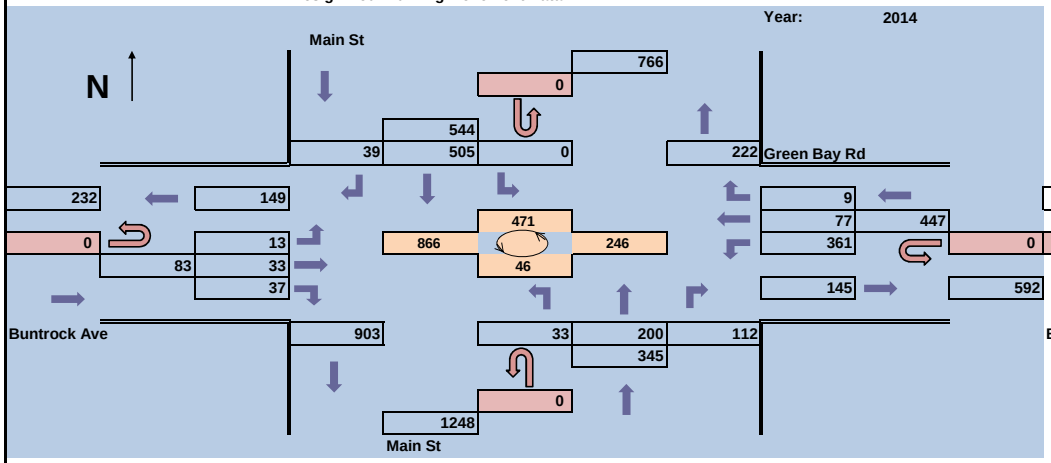

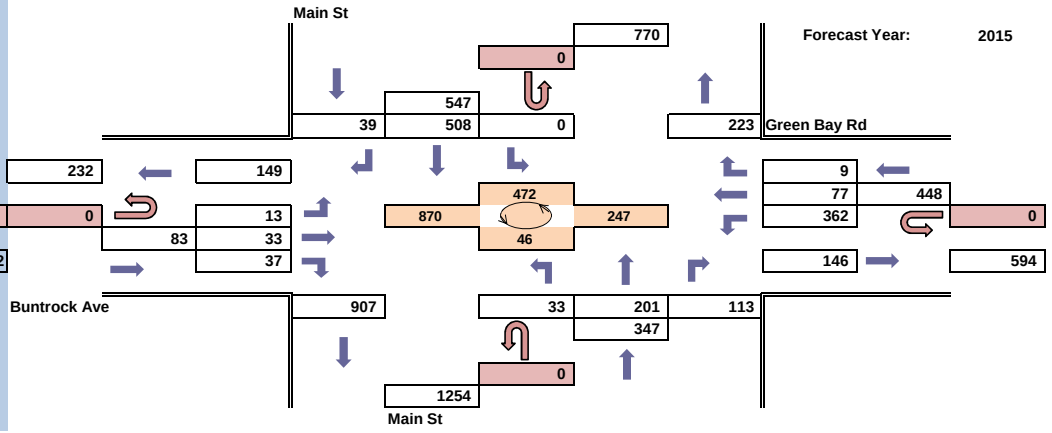

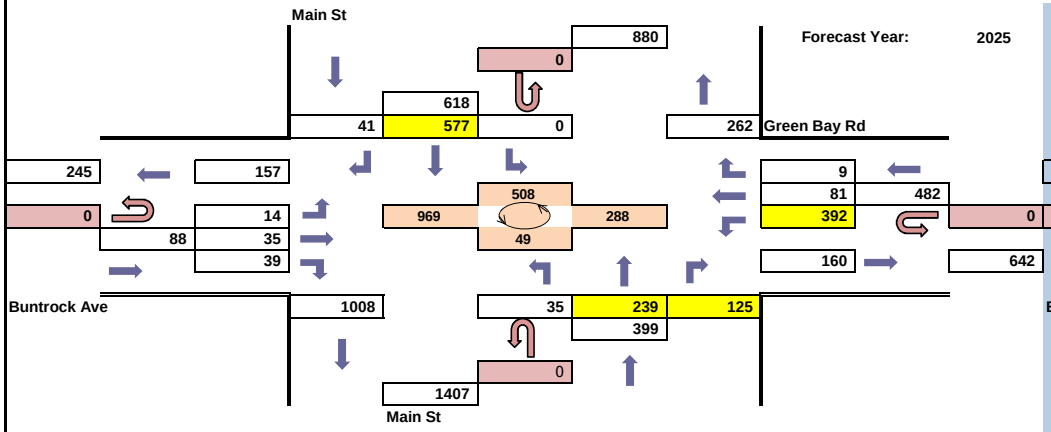

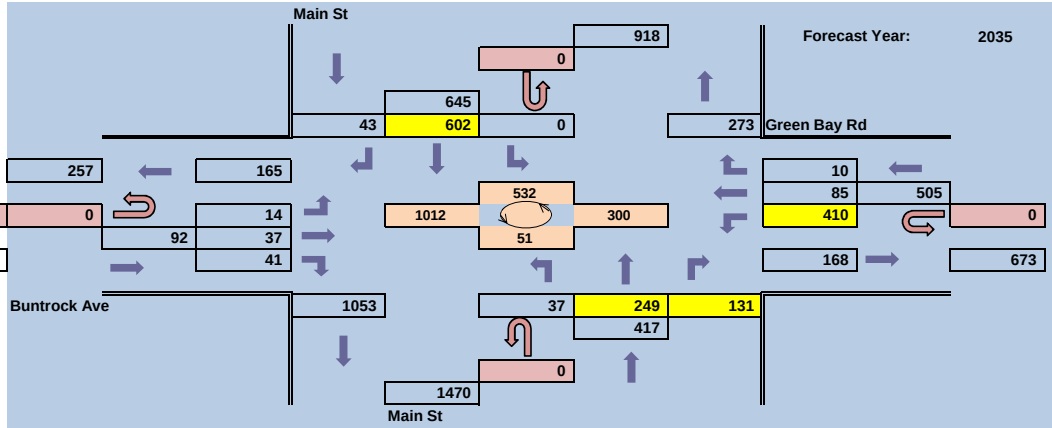

WisDot SE Region

Traffic Forecasting Section
Forecast by: Brent DesRoches
Phone: 262-548-5611
Email: brent.desroches@dot.wi.gov

Projected PM Design Hour Traffic Volumes

With Development

Design Hour: 4:30-5:30pm

Forecast Completed: 29 April 2014

Project Description

Project ID: 2697-00-75
Location: Division Rd to Heidel Rd
Route: Main St
Region/County: Ozaukee

Design Hour Turning Movement Data

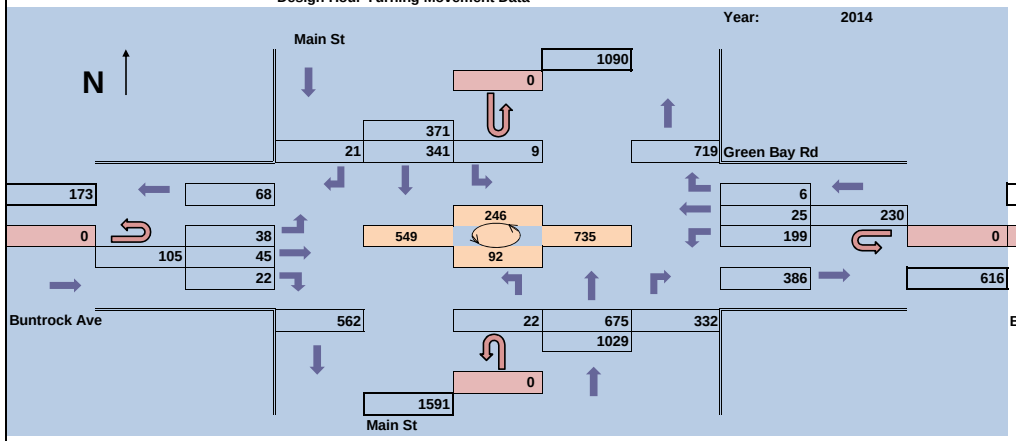

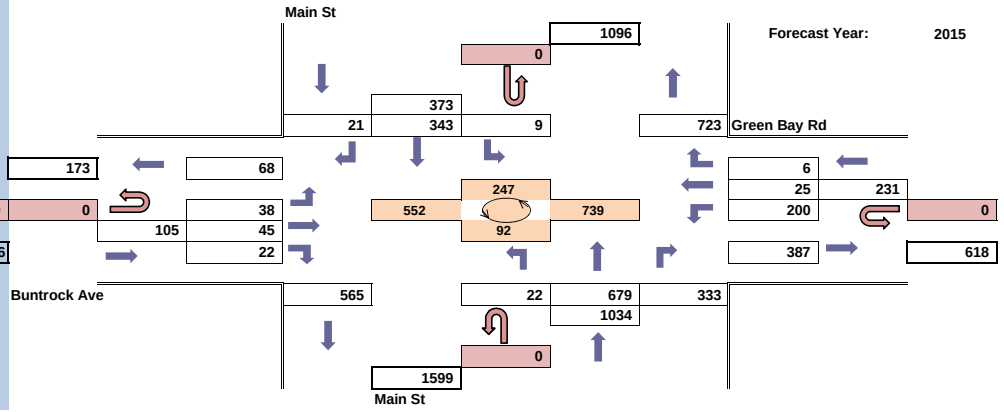

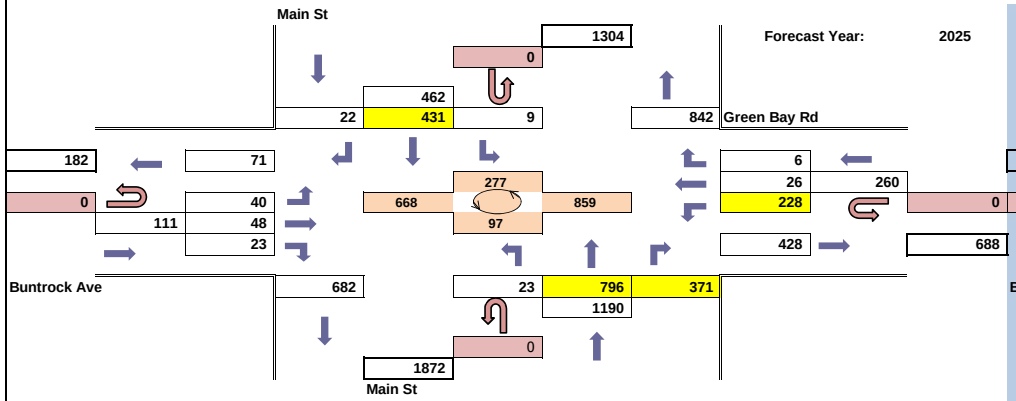

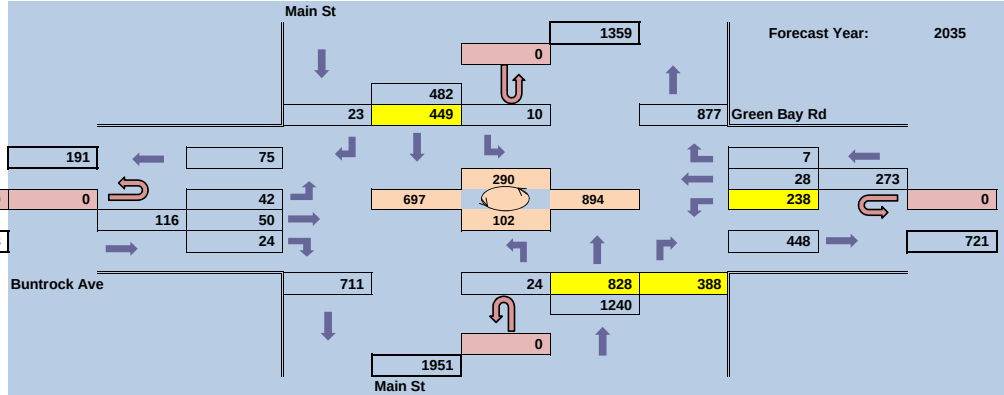

WisDot SE Region
Traffic Forecasting Section
Forecast by: Brent DesRoches
Phone: 262-548-5611
Email: brent.desroches@dot.wi.gov

Projected AM Design Hour Traffic Volumes

With Development

Design Hour: 7:00-8:00am

Forecast Completed: 29 April 2014

Project Description

Project ID: 2697-00-75
Location: Division Rd to Heidel Rd
Route: Main St
Region/County: Ozaukee

Design Hour Turning Movement Data

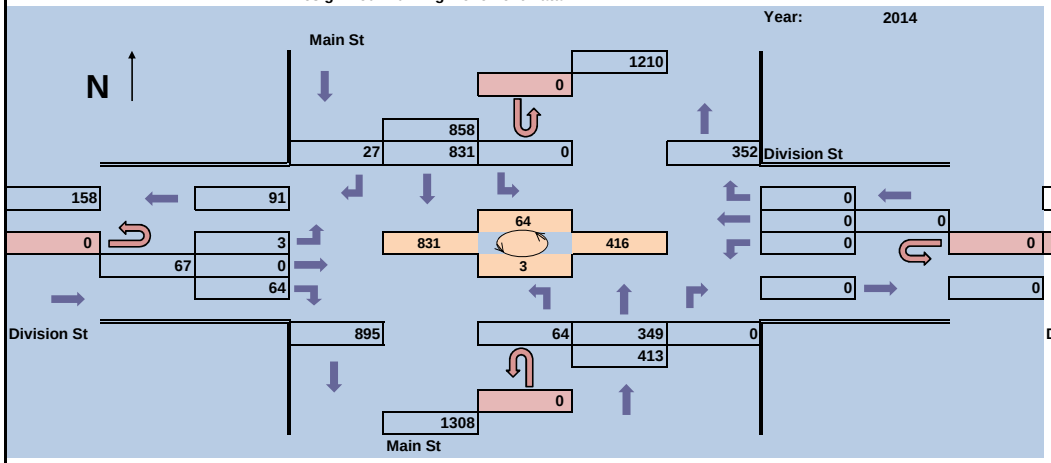

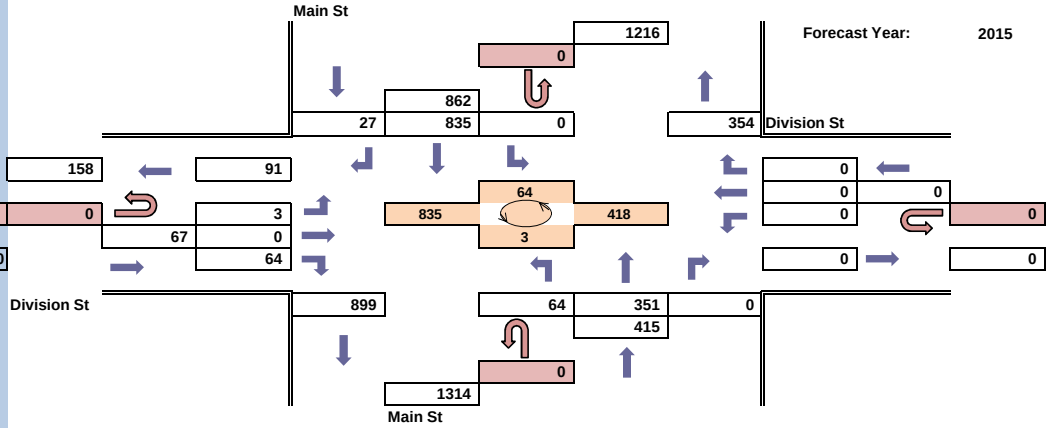

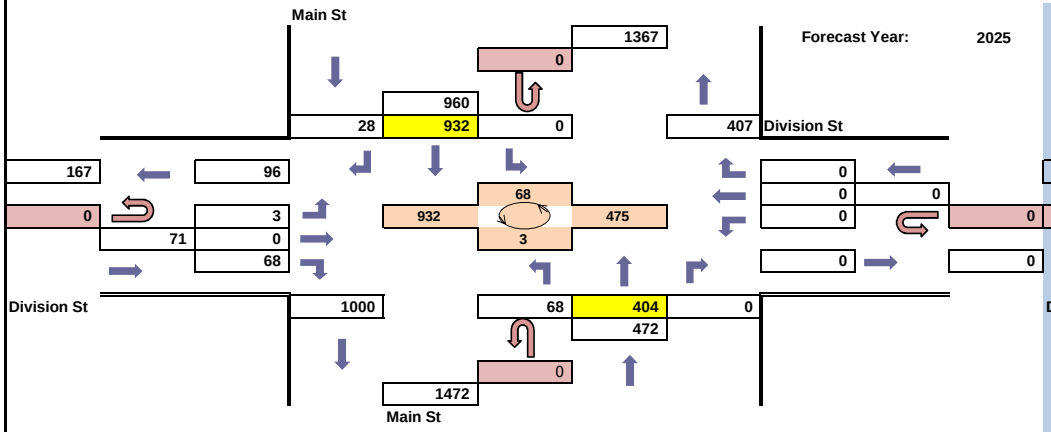

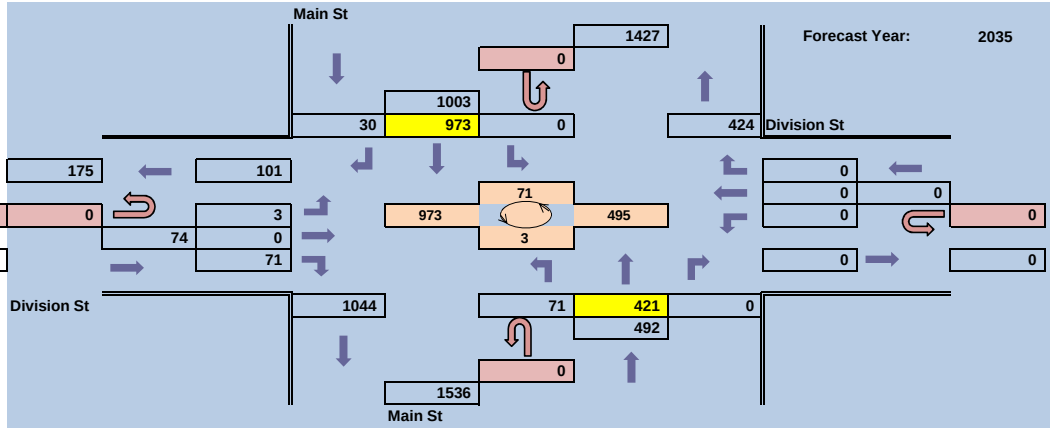

WisDot SE Region

Traffic Forecasting Section
Forecast by: Brent DesRoches
Phone: 262-548-5611
Email: brent.desroches@dot.wi.gov

Projected PM Design Hour Traffic Volumes

With Development

Design Hour: 4:30-5:30pm

Forecast Completed: 29 April 2014

Project Description

Project ID: 2697-00-75
Location: Division Rd to Heidel Rd
Route: Main St
Region/County: Ozaukee

Design Hour Turning Movement Data

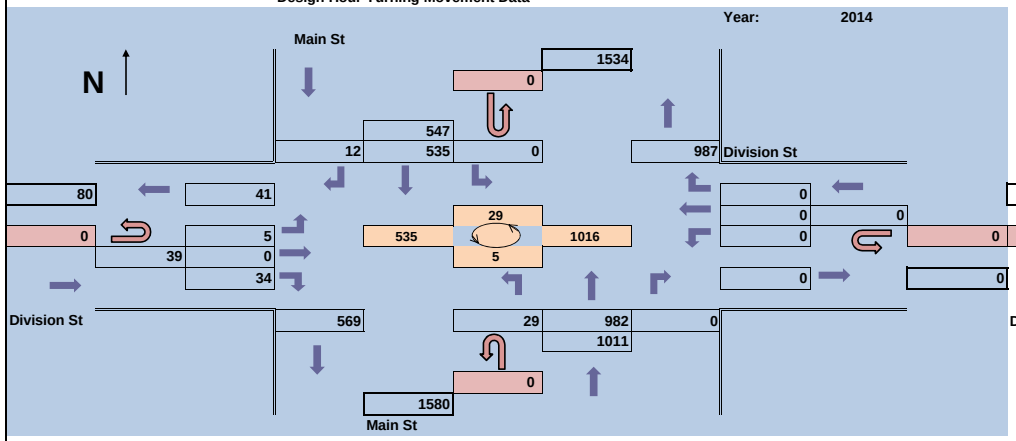

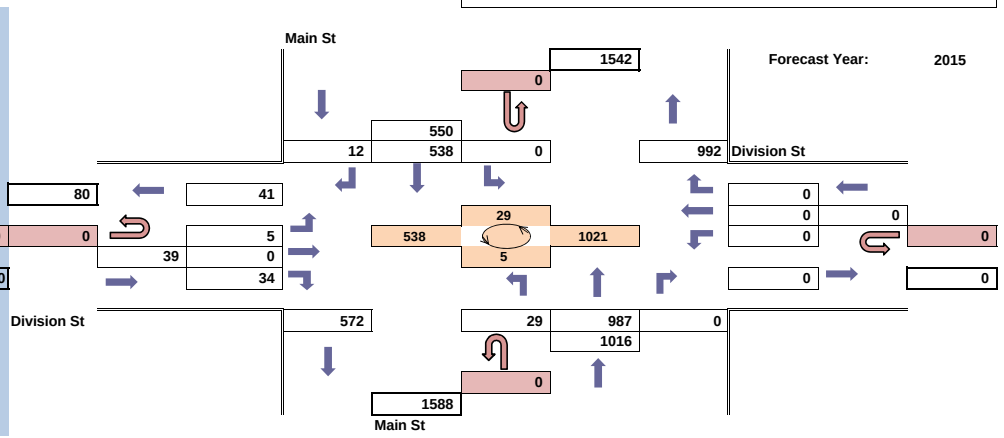

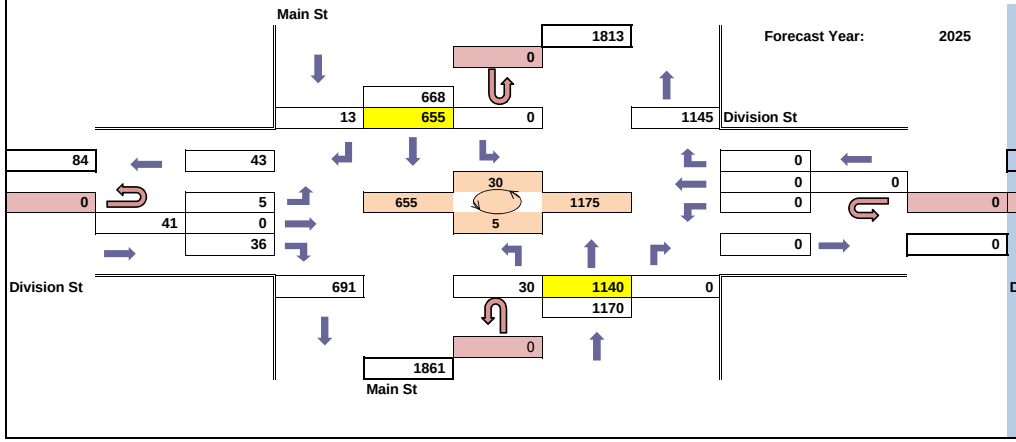

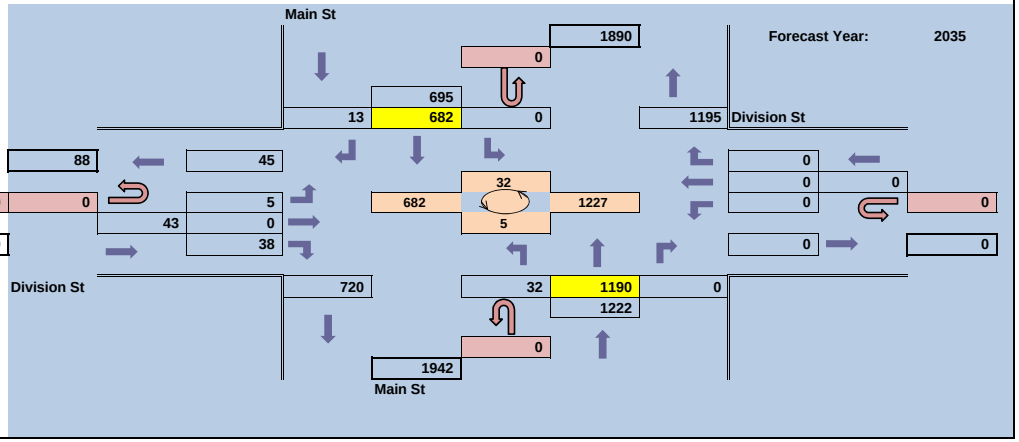

APPENDIX A3

TRAFFIC DATA COLLECTION

EXISTING SIGNAL TIMINGS

Traffic Signal Timing

This traffic signal shall be fully operational, as shown in the "Sequence of Operations" sheet in the plan set. The traffic signals shall be timed according to the following traffic signal timings.

PROPOSED SIGNAL TIMING
N. MAIN STREET WITH BUNTROCK AVENUE/GREEN BAY ROAD

Phase	SB Main St. **2**	EB Buntrock **4**	NB Main St. **6**	WB Green Bay **8**
Initial Interval	-	6.0	-	6.0
Variable Initial	-	-	-	-
Minimum Assured Green	32.0	8.0	32.0	8.0
Number of Actuations	-	-	-	-
Passage Time	-	2.0	-	2.0
Extension Stretch	-	2.0	-	2.0
Maximum Green*	32.0	25.0	32.0	25.0
Allowable Gap	-	2.0	-	2.0
Time Before Reduction	-	-	-	-
Time to Reduce	-	-	-	-
Yellow	3.0	3.0	3.0	3.0
All-Red	1.0	1.0	1.0	1.0
Walk	7.0	7.0	7.0	7.0
Flashing Don't Walk	17.0	16.0	17.0	16.0

65 Second Background Cycle (except on Sunday from 8:30 AM to 12:30 PM, the background cycle will be 70 seconds)

* Note: Maximum Greens for a Sunday from 8:30 AM to 12:30 PM shall be as follows:

- Phase 2 (SB Main) = 25 seconds;
- Phase 4 (EB Buntrock) = 37 seconds;
- Phase 6 (NB Main) = 25 seconds;
- Phase 8 (WB Green Bay Rd) = 37 seconds

Traffic Signal Timing

This traffic signal shall be fully operational, as shown in the "Sequence of Operations" sheet in the plan set. The traffic signals shall be timed according to the following traffic signal timings.

PROPOSED SIGNAL TIMING
N. MAIN STREET WITH FREISTADT ROAD

Phase	SB Main St. 2	EB Freistadt 4	NB Main St. 6	WB Freistadt 8
Initial Interval	-	6.0	-	6.0
Variable Initial	-	-	-	-
Minimum Assured Green	32.0	8.0	32.0	8.0
Number of Actuations	-	-	-	-
Passage Time	-	2.0	-	2.0
Extension Stretch	-	2.0	-	2.0
Maximum Green	32.0	25.0	32.0	25.0
Allowable Gap	-	2.0	-	2.0
Time Before Reduction	-	-	-	-
Time to Reduce	-	-	-	-
Yellow	3.0	3.0	3.0	3.0
All-Red	1.0	1.0	1.0	1.0
Walk	7.0	7.0	7.0	7.0
Flashing Don't Walk	14.0	16.0	14.0	16.0

65 Second Background Cycle

APPENDIX B

MAIN STREET CRASH DATA AND CRASH DIAGRAMS

Maint Street Crash Report Data ID# 2697-00-75
8/12/2014

Location	Report #	DATE	VEH	INJ	FAT	DR	ALC	WEATHER	DRIVER/OTHER FACTORS	DESCRIPTION OF ACCIDENT
226 S Main Street	11-2540	8/24/11		0				Clear		NB vehicle 3 rear ended vehicle 2 which rear ended vehicle 1
185 S Main Street	12-844	5/10/12		0				Clear	Followed too closely	NB vehicle rear ended vehicle slowing for traffic
163 S Main Street	12-2387	12/18/12		0				Snow		NB vehicle rear ended vehicle slowing for traffic
140 S Main Street	12-1502	8/23/12		0				Clear	Followed too closely	NB vehicle rear ended vehicle slowing for traffic
130 S Main Street	10-1136	8/9/10		1				Clear	Inattentive driving	NB vehicle left roadway struck light pole
139 N Main Street	11-3259	12/10/11		0				Clear		SB vehicle rear ended SB vehicle turning right
139 N Main Street	11-2387	7/29/11		0				Clear		Vehicle backing into roadway struck light pole
200 Block N Main Street	10-148	2/18/2010		1				Clear	Operating Left of Center; Traffic violation	SB vehicle entered opposing lane and struck NB vehicle
278 N Main Street	12-2363	12/15/12		0				Rain	Failure to yield	Vehicle rolled out of driveway and struck NB vehicle
278 N Main Street	11-2371	7/26/11		0				Clear	Failure to yield	WB vehicle turned right into path of NB vehicle
406 N Main Street	11-2614	9/8/11		1				Clear		NB vehicle struck illegally parked vehicle
423 N Main Street	12-310	2/11/12		1				Icy		SB vehicle slipped on ice and left roadway and struck light pole
517 N Main Street	10-242	3/17/2010		1				Clear		NB vehicle turned left into path of SB vehicle
Concord Avenue	10-418	4/26/2010		0				Clear		WB vehicle turned left into path of SB vehicle
Freistadt Road	10-1677	12/26/10		0				Dry	Traffic signal violation	WB vehicle of Freistadt ran red light struck SB vehicle on Main
Freistadt Road	11-2572	8/30/11		1				Cloudy	Traffic signal violation	WB vehicle of Freistadt ran red light struck SB vehicle on Main
Freistadt Road	11-2180	6/27/11		0				Clear		NB vehicle turned right and veered to avoid SB vehicle hitting post
Freistadt Road	11-2111	6/20/11		0				Cloudy		NB vehicle rear ended vehicle slowing for traffic
Freistadt Road	11-124	1/27/11		0				Cloudy		SB vehicle 3 rear ended vehicle 2 which rear ended vehicle 1
Freistadt Road	12-2407	12/21/12		0				Snow		EB vehicle skidded and struck SB vehicle
Freistadt Road	12-1810	10/4/12		0				Cloudy	Failure to yield	NB vehicle turned right and struck EB vehicle
Freistadt Road	12-1332	7/25/12		0				Clear	Improper right turn	SB vehicle turned right from middle lane & struck vehicle in right lane
Freistadt Road	12-150	1/20/12		0				Snow	Driving too fast for conditions	SB vehicle turned right slid and struck stopped SB vehicle
Grand Avenue	10-1660	12/21/10		0				Snow	Slippery	NB vehicle rear ended vehicle slowing for traffic
Grand Avenue	10-1022	7/26/10		1				Clear	Failure to yield	WB vehicle turned right into path of NB vehicle
Green Bay Road	10-925	7/11/10		0				Clear		SB vehicle rear ended vehicle stopped in traffic
Green Bay Road	10-780	6/17/2010		1				Clear		NB vehicle left roadway struck sign and tree
Green Bay Road	10-143	2/16/10		0				Cloudy		NB vehicle rear ended vehicle slowing for traffic
Green Bay Road	10-25	1/14/10		0				Cloudy		SB vehicle turned wide on left turn and struck sign
Green Bay Road	11-2926	10/25/11		0				Cloudy		NB vehicle rear ended vehicle slowing for traffic
Green Bay Road	11-167	2/6/11		0				Snow		EB vehicle could not stop and slid through intersection into railing
Buntrock Avenue	10-937	7/13/10		0				Clear		Hit and Run; WB vehicle hit traffic box and fled
Buntrock Avenue	10-554	5/20/2010		0				Clear	Failure to yield	WB vehicle turned left into path of EB vehicle
Spring Street	10-904	7/8/10		1				Clear		EB vehicle turned left and struck SB vehicle
Spring Street	11-2584	9/1/11		0				Clear		SB vehicle rear ended SB vehicle slowing for traffic

LEGEND
Cross/Opposing Crash
Rear End
Ran Stop Sign/light
Fixed Obstacle
Pedestrian or Bike Struck

LEGEND

- Vehicle in Motion
- Parked Vehicle
- Pedestrian
- Bicyclist
- Fixed Object (Sign/Utility Pole)
- Animal
- Number of Crashes of this type
- Number of Injuries in Crash
- Crashes involving Snow/Ice

Vehicles/objects/etc. directly involved in the crash are highlighted in red.

PROJECT NO:2697-00-75	MAIN STREET	COUNTY: OZAUKEE			E

FILE NAME : G:\C3D\2192085\DWG\Z-015-CPL-MAIN STREET PAVEMENT MARKINGS-01.DWG PLOT DATE : 3/13/2014 12:16 PM PLOT BY : KLEMM, DAVID PLOT NAME : Z-015-CPL-MAIN STREET PAVEMENT MARKINGS-01.DWG PLOT SCALE : 100:1 WISDOT/CADDS SHEET 41

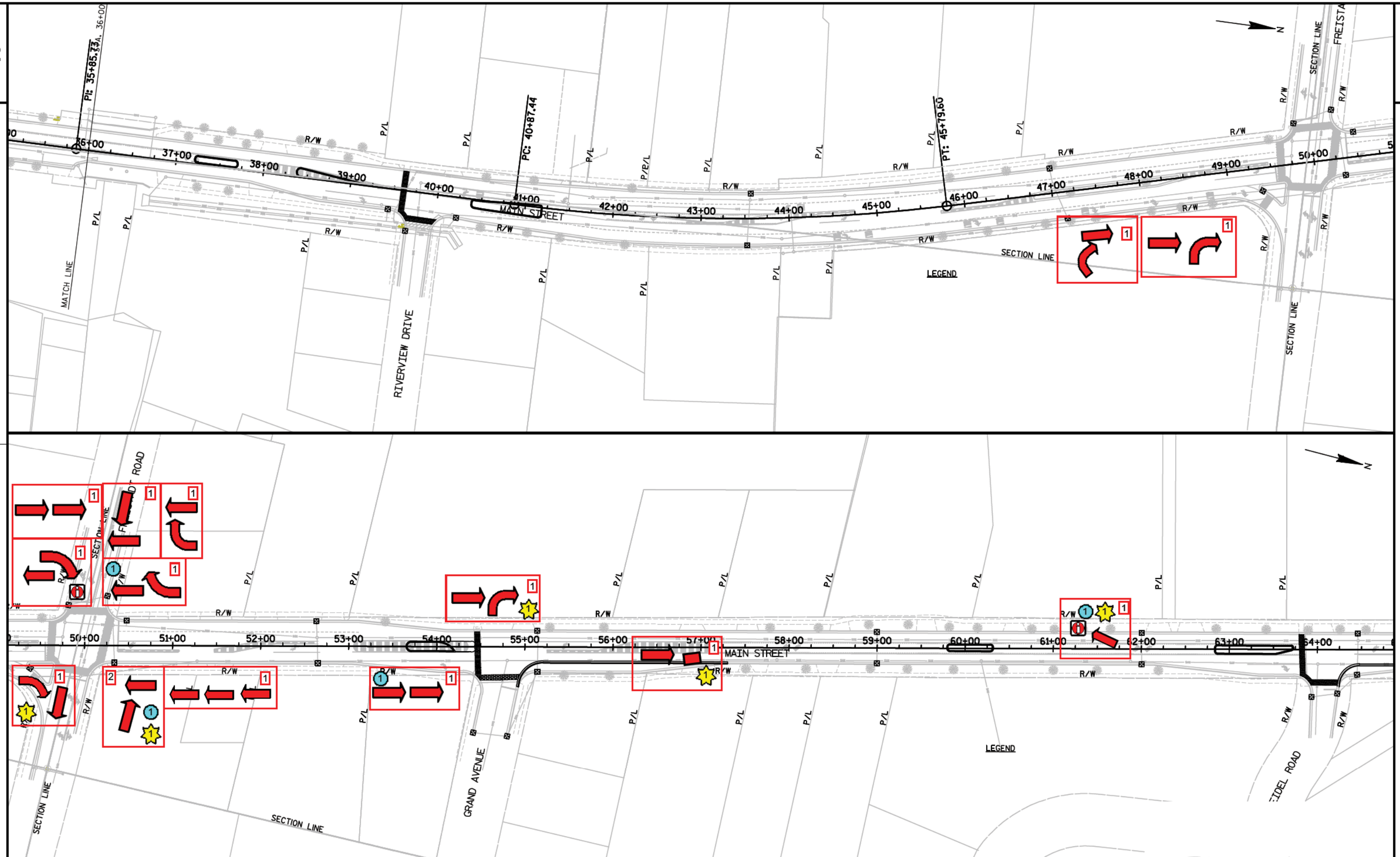

PROJECT NO:2697-00-75	MAIN STREET	COUNTY: OZAUKEE			E

FILE NAME : G:\C3D\2192085\DWG\Z-016-CPL-MAIN STREET PAVEMENT MARKINGS-02.DWG PLOT DATE : 3/13/2014 12:17 PM PLOT BY : KLEMM, DAVID PLOT NAME : Z-016-CPL-MAIN STREET PAVEMENT MARKINGS-02.DWG PLOT SCALE : 100:1

WISDOT/CADDS SHEET 41

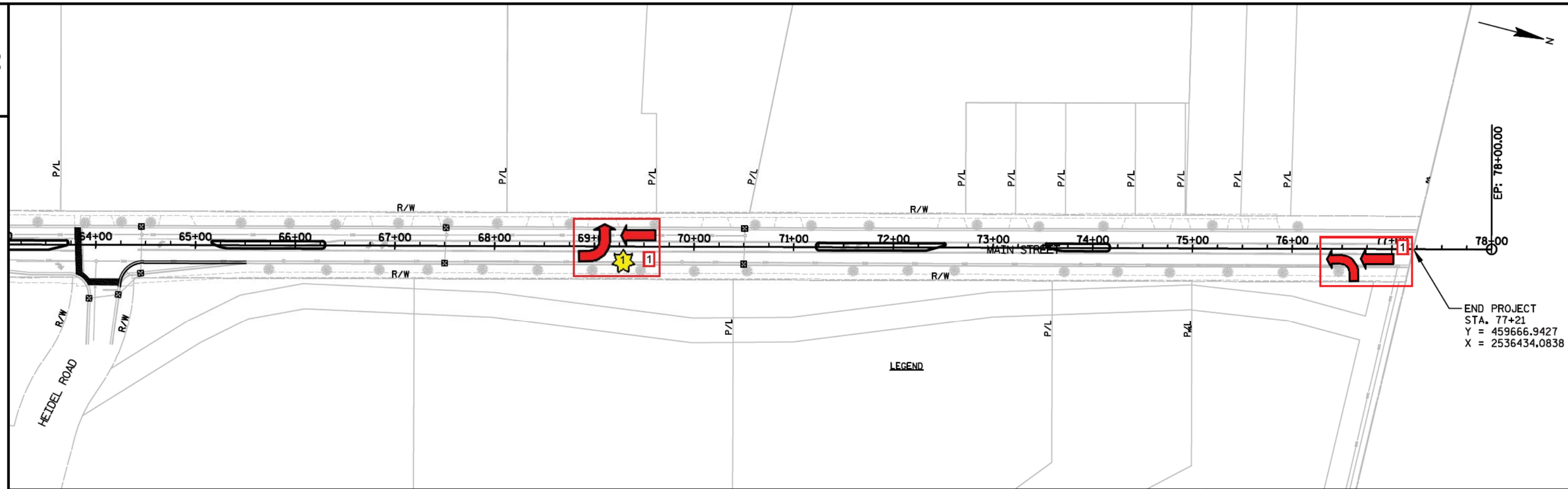

2

PROJECT NO:2697-00-75	MAIN STREET	COUNTY: OZAUKEE			E

APPENDIX C1

PEAK HOUR CAPACITY ANALYSIS WORKSHEETS

CONSTRUCTION YEAR 2015 EXISTING TRANSPORTATION SYSTEM

Lane Group	WBL	WBR	NBT	NBR	SBL	SBT
Lane Configurations						
Volume (vph)	45	10	150	5	5	430
Ideal Flow (vphpl)	1900	1900	1900	1900	1900	1900
Lane Width (ft)	12	12	12	12	12	12
Grade (%)	0%		0%			0%
Storage Length (ft)	0	0		65	125	
Storage Lanes	1	0		1	1	
Taper Length (ft)	100				100	
Link Speed (mph)	25		25			30
Link Distance (ft)	1000		950			1000
Travel Time (s)	27.3		25.9			22.7
Confl. Peds. (#/hr)						
Confl. Bikes (#/hr)						
Peak Hour Factor	0.83	0.83	0.83	0.83	0.83	0.83
Growth Factor	100%	100%	100%	100%	100%	100%
Heavy Vehicles (%)	2%	2%	3%	3%	1%	1%
Bus Blockages (#/hr)	0	0	0	0	0	0
Parking (#/hr)						
Mid-Block Traffic (%)	0%		0%			0%
Shared Lane Traffic (%)						
Lane Group Flow (vph)	66	0	181	6	6	518
Sign Control	Stop		Free			Free

Intersection Summary	
Area Type:	Other
Control Type: Unsignalized	

Intersection	
Int Delay, s/veh	1.2

Movement	WBL	WBR	NBT	NBR	SBL	SBT
Vol, veh/h	45	10	150	5	5	430
Conflicting Peds, #/hr	0	0	0	0	0	0
Sign Control	Stop	Stop	Free	Free	Free	Free
RT Channelized	-	None	-	None	-	None
Storage Length	0	-	-	65	125	-
Veh in Median Storage, #	0	-	0	-	-	0
Grade, %	0	-	0	-	-	0
Peak Hour Factor	83	83	83	83	83	83
Heavy Vehicles, %	2	2	3	3	1	1
Mvmt Flow	54	12	181	6	6	518

Major/Minor	Minor1		Major1		Major2	
Conflicting Flow All	711	181	0	0	181	0
Stage 1	181	-	-	-	-	-
Stage 2	530	-	-	-	-	-
Critical Hdwy	6.42	6.22	-	-	4.11	-
Critical Hdwy Stg 1	5.42	-	-	-	-	-
Critical Hdwy Stg 2	5.42	-	-	-	-	-
Follow-up Hdwy	3.518	3.318	-	-	2.209	-
Pot Cap-1 Maneuver	400	862	-	-	1400	-
Stage 1	850	-	-	-	-	-
Stage 2	590	-	-	-	-	-
Platoon blocked, %			-	-		-
Mov Cap-1 Maneuver	398	862	-	-	1400	-
Mov Cap-2 Maneuver	485	-	-	-	-	-
Stage 1	850	-	-	-	-	-
Stage 2	587	-	-	-	-	-

Approach	WB	NB	SB
HCM Control Delay, s	12.8	0	0.1
HCM LOS	B		

Minor Lane/Major Mvmt	NBT	NBR	WBLn1	SBL	SBT
Capacity (veh/h)	-	-	527	1400	-
HCM Lane V/C Ratio	-	-	0.126	0.004	-
HCM Control Delay (s)	-	-	12.8	7.6	-
HCM Lane LOS	-	-	B	A	-
HCM 95th %tile Q(veh)	-	-	0.4	0	-

Lane Group	WBL	WBR	NBT	NBR	SBL	SBT
Lane Configurations						
Volume (vph)	25	5	180	5	1	440
Ideal Flow (vphpl)	1900	1900	1900	1900	1900	1900
Lane Width (ft)	12	12	12	12	12	12
Grade (%)	0%		0%			0%
Storage Length (ft)	0	0		75	75	
Storage Lanes	1	0		1	1	
Taper Length (ft)	100				100	
Link Speed (mph)	25		25			25
Link Distance (ft)	1000		180			950
Travel Time (s)	27.3		4.9			25.9
Confl. Peds. (#/hr)						
Confl. Bikes (#/hr)						
Peak Hour Factor	0.80	0.80	0.80	0.80	0.80	0.80
Growth Factor	100%	100%	100%	100%	100%	100%
Heavy Vehicles (%)	0%	0%	4%	4%	1%	1%
Bus Blockages (#/hr)	0	0	0	0	0	0
Parking (#/hr)						
Mid-Block Traffic (%)	0%		0%			0%
Shared Lane Traffic (%)						
Lane Group Flow (vph)	37	0	225	6	1	550
Sign Control	Stop		Free			Free

Intersection Summary	
Area Type:	Other
Control Type: Unsignalized	

Intersection	
Int Delay, s/veh	0.6

Movement	WBL	WBR	NBT	NBR	SBL	SBT
Vol, veh/h	25	5	180	5	1	440
Conflicting Peds, #/hr	0	0	0	0	0	0
Sign Control	Stop	Stop	Free	Free	Free	Free
RT Channelized	-	None	-	None	-	None
Storage Length	0	-	-	75	75	-
Veh in Median Storage, #	0	-	0	-	-	0
Grade, %	0	-	0	-	-	0
Peak Hour Factor	80	80	80	80	80	80
Heavy Vehicles, %	0	0	4	4	1	1
Mvmt Flow	31	6	225	6	1	550

Major/Minor	Minor1		Major1		Major2	
Conflicting Flow All	778	225	0	0	225	0
Stage 1	225	-	-	-	-	-
Stage 2	553	-	-	-	-	-
Critical Hdwy	6.4	6.2	-	-	4.11	-
Critical Hdwy Stg 1	5.4	-	-	-	-	-
Critical Hdwy Stg 2	5.4	-	-	-	-	-
Follow-up Hdwy	3.5	3.3	-	-	2.209	-
Pot Cap-1 Maneuver	368	819	-	-	1350	-
Stage 1	817	-	-	-	-	-
Stage 2	580	-	-	-	-	-
Platoon blocked, %			-	-		-
Mov Cap-1 Maneuver	368	819	-	-	1350	-
Mov Cap-2 Maneuver	467	-	-	-	-	-
Stage 1	817	-	-	-	-	-
Stage 2	580	-	-	-	-	-

Approach	WB	NB	SB
HCM Control Delay, s	12.7	0	0
HCM LOS	B		

Minor Lane/Major Mvmt	NBT	NBR	WBLn1	SBL	SBT
Capacity (veh/h)	-	-	503	1350	-
HCM Lane V/C Ratio	-	-	0.075	0.001	-
HCM Control Delay (s)	-	-	12.7	7.7	-
HCM Lane LOS	-	-	B	A	-
HCM 95th %tile Q(veh)	-	-	0.2	0	-

Lane Group	EBL	EBT	EBR	WBL	WBT	WBR	NBL	NBT	NBR	SBL	SBT	SBR
Lane Configurations												
Volume (vph)	30	40	100	15	85	20	45	130	10	10	385	55
Ideal Flow (vphpl)	1900	1900	1900	1900	1900	1900	1900	1900	1900	1900	1900	1900
Lane Width (ft)	12	12	12	12	12	12	12	12	12	12	12	12
Grade (%)		0%			0%			0%			0%	
Storage Length (ft)	100		0	70		0	70		260	100		0
Storage Lanes	1		0	1		0	1		1	1		0
Taper Length (ft)	100			100			100			100		
Right Turn on Red			No			No			No			No
Link Speed (mph)		25			25			25			25	
Link Distance (ft)		1000			1000			570			320	
Travel Time (s)		27.3			27.3			15.5			8.7	
Confl. Peds. (#/hr)												
Confl. Bikes (#/hr)												
Peak Hour Factor	0.85	0.85	0.85	0.85	0.85	0.85	0.85	0.85	0.85	0.85	0.85	0.85
Growth Factor	100%	100%	100%	100%	100%	100%	100%	100%	100%	100%	100%	100%
Heavy Vehicles (%)	7%	7%	7%	2%	2%	2%	8%	8%	8%	1%	1%	1%
Bus Blockages (#/hr)	0	0	0	0	0	0	0	0	0	0	0	0
Parking (#/hr)												
Mid-Block Traffic (%)		0%			0%			0%			0%	
Shared Lane Traffic (%)												
Lane Group Flow (vph)	35	165	0	18	124	0	53	153	12	12	518	0
Turn Type	Perm	NA		Perm	NA		Perm	NA	Perm	Perm	NA	
Protected Phases		4			8			6			2	
Permitted Phases	4			8			6		6	2		
Detector Phase	4	4		8	8		6	6	6	2	2	
Switch Phase												
Minimum Initial (s)	8.0	8.0		8.0	8.0		32.0	32.0	32.0	32.0	32.0	
Minimum Split (s)	27.0	27.0		27.0	27.0		36.0	36.0	36.0	36.0	36.0	
Total Split (s)	29.0	29.0		29.0	29.0		36.0	36.0	36.0	36.0	36.0	
Total Split (%)	44.6%	44.6%		44.6%	44.6%		55.4%	55.4%	55.4%	55.4%	55.4%	
Maximum Green (s)	25.0	25.0		25.0	25.0		32.0	32.0	32.0	32.0	32.0	
Yellow Time (s)	3.0	3.0		3.0	3.0		3.0	3.0	3.0	3.0	3.0	
All-Red Time (s)	1.0	1.0		1.0	1.0		1.0	1.0	1.0	1.0	1.0	
Lost Time Adjust (s)	0.0	0.0		0.0	0.0		0.0	0.0	0.0	0.0	0.0	
Total Lost Time (s)	4.0	4.0		4.0	4.0		4.0	4.0	4.0	4.0	4.0	
Lead/Lag												
Lead-Lag Optimize?												
Vehicle Extension (s)	2.0	2.0		2.0	2.0		3.0	3.0	3.0	3.0	3.0	
Minimum Gap (s)	2.0	2.0		2.0	2.0		3.0	3.0	3.0	3.0	3.0	
Time Before Reduce (s)	0.0	0.0		0.0	0.0		0.0	0.0	0.0	0.0	0.0	
Time To Reduce (s)	0.0	0.0		0.0	0.0		0.0	0.0	0.0	0.0	0.0	
Recall Mode	None	None		None	None		Min	Min	Min	Min	Min	
Walk Time (s)	7.0	7.0		7.0	7.0		7.0	7.0	7.0	7.0	7.0	
Flash Dont Walk (s)	16.0	16.0		16.0	16.0		14.0	14.0	14.0	14.0	14.0	
Pedestrian Calls (#/hr)	0	0		0	0		0	0	0	0	0	
v/c Ratio	0.14	0.51		0.07	0.34		0.09	0.12	0.01	0.01	0.21	
Control Delay	17.6	23.8		16.5	19.7		4.7	4.4	4.1	4.1	4.1	
Queue Delay	0.0	0.0		0.0	0.0		0.0	0.0	0.0	0.0	0.0	

Lane Group	EBL	EBT	EBR	WBL	WBT	WBR	NBL	NBT	NBR	SBL	SBT	SBR
Total Delay	17.6	23.8		16.5	19.7		4.7	4.4	4.1	4.1	4.1	
Queue Length 50th (ft)	9	44		4	32		5	13	1	1	25	
Queue Length 95th (ft)	25	83		16	63		17	35	6	6	51	
Internal Link Dist (ft)		920			920			490			240	
Turn Bay Length (ft)	100			70			70		260	100		
Base Capacity (vph)	616	813		607	928		573	1243	1056	878	2478	
Starvation Cap Reductn	0	0		0	0		0	0	0	0	0	
Spillback Cap Reductn	0	0		0	0		0	0	0	0	0	
Storage Cap Reductn	0	0		0	0		0	0	0	0	0	
Reduced v/c Ratio	0.06	0.20		0.03	0.13		0.09	0.12	0.01	0.01	0.21	

Intersection Summary

Area Type: Other
Cycle Length: 65
Actuated Cycle Length: 49
Natural Cycle: 65
Control Type: Actuated-Uncoordinated

Splits and Phases: 300: Main St & Freistadt Rd

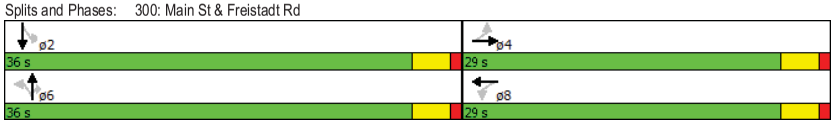

Movement	EBL	EBT	EBR	WBL	WBT	WBR	NBL	NBT	NBR	SBL	SBT	SBR
Lane Configurations												
Volume (veh/h)	30	40	100	15	85	20	45	130	10	10	385	55
Number	7	4	14	3	8	18	1	6	16	5	2	12
Initial Q (Qb), veh	0	0	0	0	0	0	0	0	0	0	0	0
Ped-Bike Adj(A_pbT)	1.00		1.00	1.00		1.00	1.00		1.00	1.00		1.00
Parking Bus, Adj	1.00	1.00	1.00	1.00	1.00	1.00	1.00	1.00	1.00	1.00	1.00	1.00
Adj Sat Flow, veh/h/ln	177.6	177.6	190.0	186.3	186.3	190.0	175.9	175.9	175.9	188.1	188.1	190.0
Adj Flow Rate, veh/h	35	47	118	18	100	24	53	153	12	12	453	65
Adj No. of Lanes	1	1	0	1	1	0	1	1	1	1	2	0
Peak Hour Factor	0.85	0.85	0.85	0.85	0.85	0.85	0.85	0.85	0.85	0.85	0.85	0.85
Percent Heavy Veh, %	7	7	7	2	2	2	8	8	8	1	1	1
Cap, veh/h	285	79	197	244	254	61	649	1161	987	919	2073	296
Arrive On Green	0.17	0.17	0.17	0.17	0.17	0.17	0.66	0.66	0.66	0.66	0.66	0.66
Sat Flow, veh/h	1203	449	1128	1216	1453	349	831	1759	1495	1228	3141	448
Grp Volume(v), veh/h	35	0	165	18	0	124	53	153	12	12	257	261
Grp Sat Flow(s),veh/h/ln	1203	0	1577	1216	0	1801	831	1759	1495	1228	1787	1802
Q Serve(g_s), s	1.3	0.0	4.7	0.7	0.0	3.0	1.3	1.6	0.1	0.2	2.8	2.8
Cycle Q Clear(g_c), s	4.2	0.0	4.7	5.3	0.0	3.0	4.1	1.6	0.1	1.7	2.8	2.8
Prop In Lane	1.00		0.72	1.00		0.19	1.00		1.00	1.00		0.25
Lane Grp Cap(c), veh/h	285	0	276	244	0	315	649	1161	987	919	1180	1190
V/C Ratio(X)	0.12	0.00	0.60	0.07	0.00	0.39	0.08	0.13	0.01	0.01	0.22	0.22
Avail Cap(c_a), veh/h	696	0	813	658	0	929	649	1161	987	919	1180	1190
HCM Platoon Ratio	1.00	1.00	1.00	1.00	1.00	1.00	1.00	1.00	1.00	1.00	1.00	1.00
Upstream Filter(I)	1.00	0.00	1.00	1.00	0.00	1.00	1.00	1.00	1.00	1.00	1.00	1.00
Uniform Delay (d), s/veh	19.6	0.0	18.4	20.9	0.0	17.7	4.1	3.1	2.8	3.4	3.3	3.3
Incr Delay (d2), s/veh	0.1	0.0	0.8	0.0	0.0	0.3	0.1	0.1	0.0	0.0	0.1	0.1
Initial Q Delay(d3),s/veh	0.0	0.0	0.0	0.0	0.0	0.0	0.0	0.0	0.0	0.0	0.0	0.0
%ile BackOfQ(50%),veh/ln	0.4	0.0	2.1	0.2	0.0	1.5	0.3	0.7	0.1	0.1	1.4	1.4
LnGrp Delay(d),s/veh	19.7	0.0	19.2	20.9	0.0	18.0	4.1	3.1	2.8	3.4	3.4	3.4
LnGrp LOS	B		B	C		B	A	A	A	A	A	A
Approach Vol, veh/h		200			142			218			530	
Approach Delay, s/veh		19.3			18.4			3.4			3.4	
Approach LOS		B			B			A			A	

Timer	1	2	3	4	5	6	7	8
Assigned Phs		2		4		6		8
Phs Duration (G+Y+Rc), s		36.0		12.5		36.0		12.5
Change Period (Y+Rc), s		4.0		4.0		4.0		4.0
Max Green Setting (Gmax), s		32.0		25.0		32.0		25.0
Max Q Clear Time (g_c+I1), s		4.8		6.7		6.1		7.3
Green Ext Time (p_c), s		5.1		1.2		5.0		1.2

Intersection Summary	
HCM 2010 Ctrl Delay	8.2
HCM 2010 LOS	A

Lane Group	WBL	WBR	NBT	NBR	SBL	SBT
Lane Configurations						
Volume (vph)	20	1	185	5	5	500
Ideal Flow (vphpl)	1900	1900	1900	1900	1900	1900
Lane Width (ft)	12	12	12	12	12	12
Grade (%)	0%		0%			0%
Storage Length (ft)	0	0		85	115	
Storage Lanes	1	0		1	1	
Taper Length (ft)	100				100	
Link Speed (mph)	25		25			25
Link Distance (ft)	1000		1100			430
Travel Time (s)	27.3		30.0			11.7
Confl. Peds. (#/hr)						
Confl. Bikes (#/hr)						
Peak Hour Factor	0.80	0.80	0.80	0.80	0.80	0.80
Growth Factor	100%	100%	100%	100%	100%	100%
Heavy Vehicles (%)	0%	0%	8%	8%	2%	2%
Bus Blockages (#/hr)	0	0	0	0	0	0
Parking (#/hr)						
Mid-Block Traffic (%)	0%		0%			0%
Shared Lane Traffic (%)						
Lane Group Flow (vph)	26	0	231	6	6	625
Sign Control	Stop		Free			Free

Intersection Summary	
Area Type:	Other

Control Type: Unsignalized

Intersection	
Int Delay, s/veh	0.5

Movement	WBL	WBR	NBT	NBR	SBL	SBT
Vol, veh/h	20	1	185	5	5	500
Conflicting Peds, #/hr	0	0	0	0	0	0
Sign Control	Stop	Stop	Free	Free	Free	Free
RT Channelized	-	None	-	None	-	None
Storage Length	0	-	-	85	115	-
Veh in Median Storage, #	0	-	0	-	-	0
Grade, %	0	-	0	-	-	0
Peak Hour Factor	80	80	80	80	80	80
Heavy Vehicles, %	0	0	8	8	2	2
Mvmt Flow	25	1	231	6	6	625

Major/Minor	Minor1		Major1		Major2	
Conflicting Flow All	869	231	0	0	231	0
Stage 1	231	-	-	-	-	-
Stage 2	638	-	-	-	-	-
Critical Hdwy	6.4	6.2	-	-	4.12	-
Critical Hdwy Stg 1	5.4	-	-	-	-	-
Critical Hdwy Stg 2	5.4	-	-	-	-	-
Follow-up Hdwy	3.5	3.3	-	-	2.218	-
Pot Cap-1 Maneuver	325	813	-	-	1337	-
Stage 1	812	-	-	-	-	-
Stage 2	530	-	-	-	-	-
Platoon blocked, %			-	-		-
Mov Cap-1 Maneuver	324	813	-	-	1337	-
Mov Cap-2 Maneuver	427	-	-	-	-	-
Stage 1	812	-	-	-	-	-
Stage 2	528	-	-	-	-	-

Approach	WB	NB	SB
HCM Control Delay, s	13.8	0	0.1
HCM LOS	B		

Minor Lane/Major Mvmt	NBT	NBR	WBLn1	SBL	SBT
Capacity (veh/h)	-	-	437	1337	-
HCM Lane V/C Ratio	-	-	0.06	0.005	-
HCM Control Delay (s)	-	-	13.8	7.7	-
HCM Lane LOS	-	-	B	A	-
HCM 95th %tile Q(veh)	-	-	0.2	0	-

Lane Group	EBL	EBT	EBR	WBL	WBT	WBR	NBL	NBT	NBR	SBL	SBT	SBR
Lane Configurations												
Volume (vph)	15	35	35	360	75	10	35	200	115	1	510	40
Ideal Flow (vphpl)	1900	1900	1900	1900	1900	1900	1900	1900	1900	1900	1900	1900
Lane Width (ft)	12	12	12	12	12	12	12	12	12	12	12	12
Grade (%)		0%			0%			0%			0%	
Storage Length (ft)	0		0	0		65	100		100	75		0
Storage Lanes	0		0	1		1	1		1	1		0
Taper Length (ft)	100			100			100			100		
Right Turn on Red			No			No			No			No
Link Speed (mph)		25			25			25			25	
Link Distance (ft)		1000			1000			920			1100	
Travel Time (s)		27.3			27.3			25.1			30.0	
Confl. Peds. (#/hr)												
Confl. Bikes (#/hr)												
Peak Hour Factor	0.77	0.77	0.77	0.77	0.77	0.77	0.77	0.77	0.77	0.77	0.77	0.77
Growth Factor	100%	100%	100%	100%	100%	100%	100%	100%	100%	100%	100%	100%
Heavy Vehicles (%)	4%	4%	4%	3%	3%	3%	5%	5%	5%	2%	2%	2%
Bus Blockages (#/hr)	0	0	0	0	0	0	0	0	0	0	0	0
Parking (#/hr)												
Mid-Block Traffic (%)		0%			0%			0%			0%	
Shared Lane Traffic (%)												
Lane Group Flow (vph)	0	109	0	468	110	0	45	260	149	1	714	0
Turn Type	Perm	NA		Perm	NA		Perm	NA	Perm	Perm	NA	
Protected Phases		4			8			6			2	
Permitted Phases	4			8			6		6	2		
Detector Phase	4	4		8	8		6	6	6	2	2	
Switch Phase												
Minimum Initial (s)	8.0	8.0		8.0	8.0		32.0	32.0	32.0	32.0	32.0	
Minimum Split (s)	27.0	27.0		27.0	27.0		36.0	36.0	36.0	36.0	36.0	
Total Split (s)	29.0	29.0		29.0	29.0		36.0	36.0	36.0	36.0	36.0	
Total Split (%)	44.6%	44.6%		44.6%	44.6%		55.4%	55.4%	55.4%	55.4%	55.4%	
Maximum Green (s)	25.0	25.0		25.0	25.0		32.0	32.0	32.0	32.0	32.0	
Yellow Time (s)	3.0	3.0		3.0	3.0		3.0	3.0	3.0	3.0	3.0	
All-Red Time (s)	1.0	1.0		1.0	1.0		1.0	1.0	1.0	1.0	1.0	
Lost Time Adjust (s)		0.0		0.0	0.0		0.0	0.0	0.0	0.0	0.0	
Total Lost Time (s)		4.0		4.0	4.0		4.0	4.0	4.0	4.0	4.0	
Lead/Lag												
Lead-Lag Optimize?												
Vehicle Extension (s)	2.0	2.0		2.0	2.0		3.0	3.0	3.0	3.0	3.0	
Minimum Gap (s)	2.0	2.0		2.0	2.0		3.0	3.0	3.0	3.0	3.0	
Time Before Reduce (s)	0.0	0.0		0.0	0.0		0.0	0.0	0.0	0.0	0.0	
Time To Reduce (s)	0.0	0.0		0.0	0.0		0.0	0.0	0.0	0.0	0.0	
Recall Mode	None	None		None	None		Min	Min	Min	Min	Min	
Walk Time (s)	7.0	7.0		7.0	7.0		7.0	7.0	7.0	7.0	7.0	
Flash Dont Walk (s)	16.0	16.0		16.0	16.0		17.0	17.0	17.0	17.0	17.0	
Pedestrian Calls (#/hr)	0	0		0	0		0	0	0	0	0	
v/c Ratio		0.18		0.93	0.16		0.26	0.29	0.19	0.00	0.77	
Control Delay		14.2		47.6	14.0		14.8	10.7	10.1	8.0	20.7	
Queue Delay		0.0		0.0	0.0		0.0	0.0	0.0	0.0	0.0	

Lane Group	EBL	EBT	EBR	WBL	WBT	WBR	NBL	NBT	NBR	SBL	SBT	SBR
Total Delay		14.2		47.6	14.0		14.8	10.7	10.1	8.0	20.7	
Queue Length 50th (ft)		28		169	28		10	57	31	0	219	
Queue Length 95th (ft)		48		#256	48		26	82	50	2	266	
Internal Link Dist (ft)		920			920			840			1020	
Turn Bay Length (ft)							100		100	75		
Base Capacity (vph)		648		536	712		171	911	774	538	927	
Starvation Cap Reductn		0		0	0		0	0	0	0	0	
Spillback Cap Reductn		0		0	0		0	0	0	0	0	
Storage Cap Reductn		0		0	0		0	0	0	0	0	
Reduced v/c Ratio		0.17		0.87	0.15		0.26	0.29	0.19	0.00	0.77	

Intersection Summary

Area Type: Other
Cycle Length: 65
Actuated Cycle Length: 63.7
Natural Cycle: 65
Control Type: Actuated-Uncoordinated
95th percentile volume exceeds capacity, queue may be longer.
Queue shown is maximum after two cycles.

Splits and Phases: 500: Main St & Buntrock Ave/Green Bay Rd

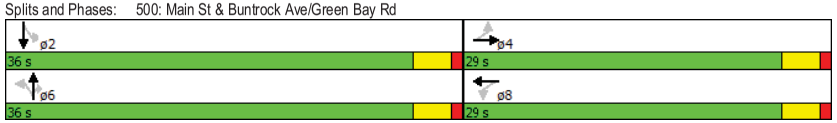

Movement	EBL	EBT	EBR	WBL	WBT	WBR	NBL	NBT	NBR	SBL	SBT	SBR
Lane Configurations												
Volume (veh/h)	15	35	35	360	75	10	35	200	115	1	510	40
Number	7	4	14	3	8	18	1	6	16	5	2	12
Initial Q (Qb), veh	0	0	0	0	0	0	0	0	0	0	0	0
Ped-Bike Adj(A_pbT)	1.00		1.00	1.00		1.00	1.00		1.00	1.00		1.00
Parking Bus, Adj	1.00	1.00	1.00	1.00	1.00	1.00	1.00	1.00	1.00	1.00	1.00	1.00
Adj Sat Flow, veh/h/ln	190.0	182.7	190.0	184.5	184.5	190.0	181.0	181.0	181.0	186.3	186.3	190.0
Adj Flow Rate, veh/h	19	45	45	468	97	13	45	260	149	1	662	52
Adj No. of Lanes	0	1	0	1	1	0	1	1	1	1	1	0
Peak Hour Factor	0.77	0.77	0.77	0.77	0.77	0.77	0.77	0.77	0.77	0.77	0.77	0.77
Percent Heavy Veh, %	4	4	4	3	3	3	5	5	5	2	2	2
Cap, veh/h	135	297	258	552	613	82	232	891	757	507	839	66
Arrive On Green	0.38	0.38	0.38	0.38	0.38	0.38	0.49	0.49	0.49	0.49	0.49	0.49
Sat Flow, veh/h	181	773	671	1289	1593	214	713	1810	1538	973	1705	134
Grp Volume(v), veh/h	109	0	0	468	0	110	45	260	149	1	0	714
Grp Sat Flow(s),veh/h/ln	1626	0	0	1289	0	1807	713	1810	1538	973	0	1839
Q Serve(g_s), s	0.0	0.0	0.0	22.3	0.0	2.6	3.6	5.5	3.5	0.0	0.0	20.9
Cycle Q Clear(g_c), s	2.7	0.0	0.0	25.0	0.0	2.6	24.6	5.5	3.5	5.6	0.0	20.9
Prop In Lane	0.17		0.41	1.00		0.12	1.00		1.00	1.00		0.07
Lane Grp Cap(c), veh/h	690	0	0	552	0	695	232	891	757	507	0	905
V/C Ratio(X)	0.16	0.00	0.00	0.85	0.00	0.16	0.19	0.29	0.20	0.00	0.00	0.79
Avail Cap(c_a), veh/h	690	0	0	552	0	695	232	891	757	507	0	905
HCM Platoon Ratio	1.00	1.00	1.00	1.00	1.00	1.00	1.00	1.00	1.00	1.00	1.00	1.00
Upstream Filter(I)	1.00	0.00	0.00	1.00	0.00	1.00	1.00	1.00	1.00	1.00	0.00	1.00
Uniform Delay (d), s/veh	13.1	0.0	0.0	22.0	0.0	13.1	23.9	9.8	9.3	11.4	0.0	13.7
Incr Delay (d2), s/veh	0.0	0.0	0.0	11.2	0.0	0.0	0.4	0.2	0.1	0.0	0.0	4.7
Initial Q Delay(d3),s/veh	0.0	0.0	0.0	0.0	0.0	0.0	0.0	0.0	0.0	0.0	0.0	0.0
%ile BackOfQ(50%),veh/ln	1.3	0.0	0.0	10.0	0.0	1.3	0.7	2.8	1.5	0.0	0.0	11.7
LnGrp Delay(d),s/veh	13.2	0.0	0.0	33.2	0.0	13.1	24.3	10.0	9.4	11.4	0.0	18.4
LnGrp LOS	B			C		B	C	A	A	B		B
Approach Vol, veh/h		109			578			454			715	
Approach Delay, s/veh		13.2			29.4			11.2			18.4	
Approach LOS		B			C			B			B	

Timer	1	2	3	4	5	6	7	8
Assigned Phs		2		4		6		8
Phs Duration (G+Y+Rc), s		36.0		29.0		36.0		29.0
Change Period (Y+Rc), s		4.0		4.0		4.0		4.0
Max Green Setting (Gmax), s		32.0		25.0		32.0		25.0
Max Q Clear Time (g_c+I1), s		22.9		4.7		26.6		27.0
Green Ext Time (p_c), s		5.0		1.7		3.3		0.0

Intersection Summary

HCM 2010 Ctrl Delay 19.8
HCM 2010 LOS B

Lane Group	EBL	EBR	NBL	NBT	SBT	SBR
Lane Configurations						
Volume (vph)	5	65	65	350	835	25
Ideal Flow (vphpl)	1900	1900	1900	1900	1900	1900
Lane Width (ft)	12	12	12	12	12	12
Grade (%)	0%			0%	0%	
Storage Length (ft)	0	0	25			150
Storage Lanes	1	1	1			1
Taper Length (ft)	100		100			
Link Speed (mph)	25			25	25	
Link Distance (ft)	1000			1000	880	
Travel Time (s)	27.3			27.3	24.0	
Confl. Peds. (#/hr)						
Confl. Bikes (#/hr)						
Peak Hour Factor	0.82	0.82	0.82	0.82	0.82	0.82
Growth Factor	100%	100%	100%	100%	100%	100%
Heavy Vehicles (%)	2%	2%	4%	4%	2%	2%
Bus Blockages (#/hr)	0	0	0	0	0	0
Parking (#/hr)						
Mid-Block Traffic (%)	0%			0%	0%	
Shared Lane Traffic (%)						
Lane Group Flow (vph)	6	79	79	427	1018	30
Sign Control	Stop			Free	Free	

Intersection Summary	
Area Type:	Other
Control Type: Unsignalized	

Intersection	
Int Delay, s/veh	1.7

Movement	EBL	EBR	NBL	NBT	SBT	SBR
Vol, veh/h	5	65	65	350	835	25
Conflicting Peds, #/hr	0	0	0	0	0	0
Sign Control	Stop	Stop	Free	Free	Free	Free
RT Channelized	-	None	-	None	-	None
Storage Length	0	0	25	-	-	150
Veh in Median Storage, #	0	-	-	0	0	-
Grade, %	0	-	-	0	0	-
Peak Hour Factor	82	82	82	82	82	82
Heavy Vehicles, %	2	2	4	4	2	2
Mvmt Flow	6	79	79	427	1018	30

Major/Minor	Minor2		Major1		Major2	
Conflicting Flow All	1603	1018	1018	0	-	0
Stage 1	1018	-	-	-	-	-
Stage 2	585	-	-	-	-	-
Critical Hdwy	6.42	6.22	4.14	-	-	-
Critical Hdwy Stg 1	5.42	-	-	-	-	-
Critical Hdwy Stg 2	5.42	-	-	-	-	-
Follow-up Hdwy	3.518	3.318	2.236	-	-	-
Pot Cap-1 Maneuver	116	288	674	-	-	-
Stage 1	349	-	-	-	-	-
Stage 2	557	-	-	-	-	-
Platoon blocked, %				-	-	-
Mov Cap-1 Maneuver	102	288	674	-	-	-
Mov Cap-2 Maneuver	231	-	-	-	-	-
Stage 1	349	-	-	-	-	-
Stage 2	492	-	-	-	-	-

Approach	EB	NB	SB
HCM Control Delay, s	22.1	1.7	0
HCM LOS	C		

Minor Lane/Major Mvmt	NBL	NBT	EBLn1	EBLn2	SBT	SBR
Capacity (veh/h)	674	-	231	288	-	-
HCM Lane V/C Ratio	0.118	-	0.026	0.275	-	-
HCM Control Delay (s)	11.1	-	21	22.2	-	-
HCM Lane LOS	B	-	C	C	-	-
HCM 95th %tile Q(veh)	0.4	-	0.1	1.1	-	-

Lane Group	WBL	WBR	NBT	NBR	SBL	SBT
Lane Configurations						
Volume (vph)	25	5	430	35	15	235
Ideal Flow (vphpl)	1900	1900	1900	1900	1900	1900
Lane Width (ft)	12	12	12	12	12	12
Grade (%)	0%		0%			0%
Storage Length (ft)	0	0		65	125	
Storage Lanes	1	0		1	1	
Taper Length (ft)	100				100	
Link Speed (mph)	25		25			30
Link Distance (ft)	1000		950			1000
Travel Time (s)	27.3		25.9			22.7
Confl. Peds. (#/hr)						
Confl. Bikes (#/hr)						
Peak Hour Factor	0.95	0.95	0.95	0.95	0.95	0.95
Growth Factor	100%	100%	100%	100%	100%	100%
Heavy Vehicles (%)	7%	7%	1%	1%	2%	2%
Bus Blockages (#/hr)	0	0	0	0	0	0
Parking (#/hr)						
Mid-Block Traffic (%)	0%		0%			0%
Shared Lane Traffic (%)						
Lane Group Flow (vph)	31	0	453	37	16	247
Sign Control	Stop		Free			Free

Intersection Summary	
Area Type:	Other
Control Type: Unsignalized	

Intersection	
Int Delay, s/veh	0.7

Movement	WBL	WBR	NBT	NBR	SBL	SBT
Vol, veh/h	25	5	430	35	15	235
Conflicting Peds, #/hr	0	0	0	0	0	0
Sign Control	Stop	Stop	Free	Free	Free	Free
RT Channelized	-	None	-	None	-	None
Storage Length	0	-	-	65	125	-
Veh in Median Storage, #	0	-	0	-	-	0
Grade, %	0	-	0	-	-	0
Peak Hour Factor	95	95	95	95	95	95
Heavy Vehicles, %	7	7	1	1	2	2
Mvmt Flow	26	5	453	37	16	247

Major/Minor	Minor1		Major1		Major2	
Conflicting Flow All	732	453	0	0	453	0
Stage 1	453	-	-	-	-	-
Stage 2	279	-	-	-	-	-
Critical Hdwy	6.47	6.27	-	-	4.12	-
Critical Hdwy Stg 1	5.47	-	-	-	-	-
Critical Hdwy Stg 2	5.47	-	-	-	-	-
Follow-up Hdwy	3.563	3.363	-	-	2.218	-
Pot Cap-1 Maneuver	381	596	-	-	1108	-
Stage 1	630	-	-	-	-	-
Stage 2	757	-	-	-	-	-
Platoon blocked, %			-	-		-
Mov Cap-1 Maneuver	375	596	-	-	1108	-
Mov Cap-2 Maneuver	480	-	-	-	-	-
Stage 1	630	-	-	-	-	-
Stage 2	746	-	-	-	-	-

Approach	WB	NB	SB
HCM Control Delay, s	12.8	0	0.5
HCM LOS	B		

Minor Lane/Major Mvmt	NBT	NBR	WBLn1	SBL	SBT
Capacity (veh/h)	-	-	496	1108	-
HCM Lane V/C Ratio	-	-	0.064	0.014	-
HCM Control Delay (s)	-	-	12.8	8.3	-
HCM Lane LOS	-	-	B	A	-
HCM 95th %tile Q(veh)	-	-	0.2	0	-

Lane Group	WBL	WBR	NBT	NBR	SBL	SBT
Lane Configurations						
Volume (vph)	5	5	505	15	5	245
Ideal Flow (vphpl)	1900	1900	1900	1900	1900	1900
Lane Width (ft)	12	12	12	12	12	12
Grade (%)	0%		0%			0%
Storage Length (ft)	0	0		75	75	
Storage Lanes	1	0		1	1	
Taper Length (ft)	100				100	
Link Speed (mph)	25		25			25
Link Distance (ft)	1000		180			950
Travel Time (s)	27.3		4.9			25.9
Confl. Peds. (#/hr)						
Confl. Bikes (#/hr)						
Peak Hour Factor	0.89	0.89	0.89	0.89	0.89	0.89
Growth Factor	100%	100%	100%	100%	100%	100%
Heavy Vehicles (%)	0%	0%	1%	1%	1%	1%
Bus Blockages (#/hr)	0	0	0	0	0	0
Parking (#/hr)						
Mid-Block Traffic (%)	0%		0%			0%
Shared Lane Traffic (%)						
Lane Group Flow (vph)	12	0	567	17	6	275
Sign Control	Stop		Free			Free

Intersection Summary	
Area Type:	Other
Control Type: Unsignalized	

Intersection	
Int Delay, s/veh	0.2

Movement	WBL	WBR	NBT	NBR	SBL	SBT
Vol, veh/h	5	5	505	15	5	245
Conflicting Peds, #/hr	0	0	0	0	0	0
Sign Control	Stop	Stop	Free	Free	Free	Free
RT Channelized	-	None	-	None	-	None
Storage Length	0	-	-	75	75	-
Veh in Median Storage, #	0	-	0	-	-	0
Grade, %	0	-	0	-	-	0
Peak Hour Factor	89	89	89	89	89	89
Heavy Vehicles, %	0	0	1	1	1	1
Mvmt Flow	6	6	567	17	6	275

Major/Minor	Minor1		Major1		Major2	
Conflicting Flow All	854	567	0	0	567	0
Stage 1	567	-	-	-	-	-
Stage 2	287	-	-	-	-	-
Critical Hdwy	6.4	6.2	-	-	4.11	-
Critical Hdwy Stg 1	5.4	-	-	-	-	-
Critical Hdwy Stg 2	5.4	-	-	-	-	-
Follow-up Hdwy	3.5	3.3	-	-	2.209	-
Pot Cap-1 Maneuver	332	527	-	-	1010	-
Stage 1	572	-	-	-	-	-
Stage 2	766	-	-	-	-	-
Platoon blocked, %			-	-		-
Mov Cap-1 Maneuver	330	527	-	-	1010	-
Mov Cap-2 Maneuver	443	-	-	-	-	-
Stage 1	572	-	-	-	-	-
Stage 2	761	-	-	-	-	-

Approach	WB	NB	SB
HCM Control Delay, s	12.7	0	0.2
HCM LOS	B		

Minor Lane/Major Mvmt	NBT	NBR	WBLn1	SBL	SBT
Capacity (veh/h)	-	-	481	1010	-
HCM Lane V/C Ratio	-	-	0.023	0.006	-
HCM Control Delay (s)	-	-	12.7	8.6	-
HCM Lane LOS	-	-	B	A	-
HCM 95th %tile Q(veh)	-	-	0.1	0	-

Lane Group	EBL	EBT	EBR	WBL	WBT	WBR	NBL	NBT	NBR	SBL	SBT	SBR
Lane Configurations												
Volume (vph)	60	95	95	30	80	25	125	430	25	25	185	45
Ideal Flow (vphpl)	1900	1900	1900	1900	1900	1900	1900	1900	1900	1900	1900	1900
Lane Width (ft)	12	12	12	12	12	12	12	12	12	12	12	12
Grade (%)		0%			0%			0%			0%	
Storage Length (ft)	100		0	70		0	70		260	100		0
Storage Lanes	1		0	1		0	1		1	1		0
Taper Length (ft)	100			100			100			100		
Right Turn on Red			No			No			No			No
Link Speed (mph)		25			25			25			25	
Link Distance (ft)		1000			1000			570			320	
Travel Time (s)		27.3			27.3			15.5			8.7	
Confl. Peds. (#/hr)												
Confl. Bikes (#/hr)												
Peak Hour Factor	0.86	0.86	0.86	0.86	0.86	0.86	0.86	0.86	0.86	0.86	0.86	0.86
Growth Factor	100%	100%	100%	100%	100%	100%	100%	100%	100%	100%	100%	100%
Heavy Vehicles (%)	0%	0%	0%	2%	2%	2%	1%	1%	1%	1%	1%	1%
Bus Blockages (#/hr)	0	0	0	0	0	0	0	0	0	0	0	0
Parking (#/hr)												
Mid-Block Traffic (%)		0%			0%			0%			0%	
Shared Lane Traffic (%)												
Lane Group Flow (vph)	70	220	0	35	122	0	145	500	29	29	267	0
Turn Type	Perm	NA		Perm	NA		Perm	NA	Perm	Perm	NA	
Protected Phases		4			8			6			2	
Permitted Phases	4			8			6		6	2		
Detector Phase	4	4		8	8		6	6	6	2	2	
Switch Phase												
Minimum Initial (s)	8.0	8.0		8.0	8.0		32.0	32.0	32.0	32.0	32.0	
Minimum Split (s)	27.0	27.0		27.0	27.0		36.0	36.0	36.0	36.0	36.0	
Total Split (s)	29.0	29.0		29.0	29.0		36.0	36.0	36.0	36.0	36.0	
Total Split (%)	44.6%	44.6%		44.6%	44.6%		55.4%	55.4%	55.4%	55.4%	55.4%	
Maximum Green (s)	25.0	25.0		25.0	25.0		32.0	32.0	32.0	32.0	32.0	
Yellow Time (s)	3.0	3.0		3.0	3.0		3.0	3.0	3.0	3.0	3.0	
All-Red Time (s)	1.0	1.0		1.0	1.0		1.0	1.0	1.0	1.0	1.0	
Lost Time Adjust (s)	0.0	0.0		0.0	0.0		0.0	0.0	0.0	0.0	0.0	
Total Lost Time (s)	4.0	4.0		4.0	4.0		4.0	4.0	4.0	4.0	4.0	
Lead/Lag												
Lead-Lag Optimize?												
Vehicle Extension (s)	2.0	2.0		2.0	2.0		3.0	3.0	3.0	3.0	3.0	
Minimum Gap (s)	2.0	2.0		2.0	2.0		3.0	3.0	3.0	3.0	3.0	
Time Before Reduce (s)	0.0	0.0		0.0	0.0		0.0	0.0	0.0	0.0	0.0	
Time To Reduce (s)	0.0	0.0		0.0	0.0		0.0	0.0	0.0	0.0	0.0	
Recall Mode	None	None		None	None		Min	Min	Min	Min	Min	
Walk Time (s)	7.0	7.0		7.0	7.0		7.0	7.0	7.0	7.0	7.0	
Flash Dont Walk (s)	16.0	16.0		16.0	16.0		14.0	14.0	14.0	14.0	14.0	
Pedestrian Calls (#/hr)	0	0		0	0		0	0	0	0	0	
v/c Ratio	0.25	0.59		0.17	0.32		0.21	0.42	0.03	0.06	0.12	
Control Delay	18.8	24.6		17.8	19.0		5.7	6.7	4.6	4.9	4.5	
Queue Delay	0.0	0.0		0.0	0.0		0.0	0.0	0.0	0.0	0.0	

Lane Group	EBL	EBT	EBR	WBL	WBT	WBR	NBL	NBT	NBR	SBL	SBT	SBR
Total Delay	18.8	24.6		17.8	19.0		5.7	6.7	4.6	4.9	4.5	
Queue Length 50th (ft)	18	59		9	31		14	59	3	3	13	
Queue Length 95th (ft)	42	107		25	62		42	131	11	12	30	
Internal Link Dist (ft)		920			920			490			240	
Turn Bay Length (ft)	100			70			70		260	100		
Base Capacity (vph)	633	863		485	882		694	1182	1005	509	2182	
Starvation Cap Reductn	0	0		0	0		0	0	0	0	0	
Spillback Cap Reductn	0	0		0	0		0	0	0	0	0	
Storage Cap Reductn	0	0		0	0		0	0	0	0	0	
Reduced v/c Ratio	0.11	0.25		0.07	0.14		0.21	0.42	0.03	0.06	0.12	

Intersection Summary

Area Type: Other
Cycle Length: 65
Actuated Cycle Length: 51
Natural Cycle: 65
Control Type: Actuated-Uncoordinated

Splits and Phases: 300: Main St & Freistadt Rd

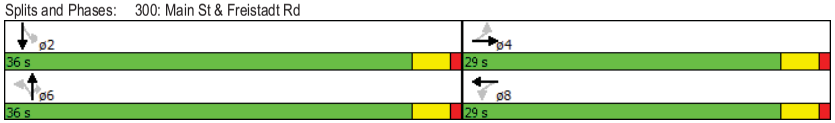

Movement	EBL	EBT	EBR	WBL	WBT	WBR	NBL	NBT	NBR	SBL	SBT	SBR
Lane Configurations												
Volume (veh/h)	60	95	95	30	80	25	125	430	25	25	185	45
Number	7	4	14	3	8	18	1	6	16	5	2	12
Initial Q (Qb), veh	0	0	0	0	0	0	0	0	0	0	0	0
Ped-Bike Adj(A_pbT)	1.00		1.00	1.00		1.00	1.00		1.00	1.00		1.00
Parking Bus, Adj	1.00	1.00	1.00	1.00	1.00	1.00	1.00	1.00	1.00	1.00	1.00	1.00
Adj Sat Flow, veh/h/ln	190.0	190.0	190.0	186.3	186.3	190.0	188.1	188.1	188.1	188.1	188.1	190.0
Adj Flow Rate, veh/h	70	110	110	35	93	29	145	500	29	29	215	52
Adj No. of Lanes	1	1	0	1	1	0	1	1	1	1	2	0
Peak Hour Factor	0.86	0.86	0.86	0.86	0.86	0.86	0.86	0.86	0.86	0.86	0.86	0.86
Percent Heavy Veh, %	0	0	0	2	2	2	1	1	1	1	1	1
Cap, veh/h	339	183	183	254	286	89	815	1189	1010	581	1813	429
Arrive On Green	0.21	0.21	0.21	0.21	0.21	0.21	0.63	0.63	0.63	0.63	0.63	0.63
Sat Flow, veh/h	1289	873	873	1156	1363	425	1119	1881	1599	879	2869	679
Grp Volume(v), veh/h	70	0	220	35	0	122	145	500	29	29	132	135
Grp Sat Flow(s),veh/h/ln	1289	0	1746	1156	0	1788	1119	1881	1599	879	1787	1761
Q Serve(g_s), s	2.5	0.0	5.8	1.4	0.0	2.9	3.0	6.7	0.3	0.9	1.5	1.5
Cycle Q Clear(g_c), s	5.4	0.0	5.8	7.2	0.0	2.9	4.6	6.7	0.3	7.6	1.5	1.5
Prop In Lane	1.00		0.50	1.00		0.24	1.00		1.00	1.00		0.39
Lane Grp Cap(c), veh/h	339	0	367	254	0	376	815	1189	1010	581	1129	1113
V/C Ratio(X)	0.21	0.00	0.60	0.14	0.00	0.32	0.18	0.42	0.03	0.05	0.12	0.12
Avail Cap(c_a), veh/h	704	0	862	581	0	882	815	1189	1010	581	1129	1113
HCM Platoon Ratio	1.00	1.00	1.00	1.00	1.00	1.00	1.00	1.00	1.00	1.00	1.00	1.00
Upstream Filter(I)	1.00	0.00	1.00	1.00	0.00	1.00	1.00	1.00	1.00	1.00	1.00	1.00
Uniform Delay (d), s/veh	19.2	0.0	18.1	21.3	0.0	17.0	4.6	4.7	3.5	6.6	3.7	3.7
Incr Delay (d2), s/veh	0.1	0.0	0.6	0.1	0.0	0.2	0.1	0.2	0.0	0.0	0.0	0.0
Initial Q Delay(d3),s/veh	0.0	0.0	0.0	0.0	0.0	0.0	0.0	0.0	0.0	0.0	0.0	0.0
%ile BackOfQ(50%),veh/ln	0.9	0.0	2.8	0.5	0.0	1.4	0.9	3.6	0.2	0.2	0.7	0.8
LnGrp Delay(d),s/veh	19.4	0.0	18.7	21.4	0.0	17.1	4.7	4.9	3.5	6.6	3.8	3.8
LnGrp LOS	B		B	C		B	A	A	A	A	A	A
Approach Vol, veh/h		290			157			674			296	
Approach Delay, s/veh		18.8			18.1			4.8			4.0	
Approach LOS		B			B			A			A	

Timer	1	2	3	4	5	6	7	8
Assigned Phs		2		4		6		8
Phs Duration (G+Y+Rc), s		36.0		14.6		36.0		14.6
Change Period (Y+Rc), s		4.0		4.0		4.0		4.0
Max Green Setting (Gmax), s		32.0		25.0		32.0		25.0
Max Q Clear Time (g_c+I1), s		9.6		7.8		8.7		9.2
Green Ext Time (p_c), s		6.3		1.5		6.4		1.5

Intersection Summary	
HCM 2010 Ctrl Delay	9.0
HCM 2010 LOS	A

Lane Group	WBL	WBR	NBT	NBR	SBL	SBT
Lane Configurations						
Volume (vph)	10	10	630	5	15	350
Ideal Flow (vphpl)	1900	1900	1900	1900	1900	1900
Lane Width (ft)	12	12	12	12	12	12
Grade (%)	0%		0%			0%
Storage Length (ft)	0	0		85	115	
Storage Lanes	1	0		1	1	
Taper Length (ft)	100				100	
Link Speed (mph)	25		25			25
Link Distance (ft)	1000		1100			430
Travel Time (s)	27.3		30.0			11.7
Confl. Peds. (#/hr)						
Confl. Bikes (#/hr)						
Peak Hour Factor	0.92	0.92	0.92	0.92	0.92	0.92
Growth Factor	100%	100%	100%	100%	100%	100%
Heavy Vehicles (%)	6%	6%	1%	1%	3%	3%
Bus Blockages (#/hr)	0	0	0	0	0	0
Parking (#/hr)						
Mid-Block Traffic (%)	0%		0%			0%
Shared Lane Traffic (%)						
Lane Group Flow (vph)	22	0	685	5	16	380
Sign Control	Stop		Free			Free

Intersection Summary	
Area Type:	Other

Control Type: Unsignalized

Intersection	
Int Delay, s/veh	0.4

Movement	WBL	WBR	NBT	NBR	SBL	SBT
Vol, veh/h	10	10	630	5	15	350
Conflicting Peds, #/hr	0	0	0	0	0	0
Sign Control	Stop	Stop	Free	Free	Free	Free
RT Channelized	-	None	-	None	-	None
Storage Length	0	-	-	85	115	-
Veh in Median Storage, #	0	-	0	-	-	0
Grade, %	0	-	0	-	-	0
Peak Hour Factor	92	92	92	92	92	92
Heavy Vehicles, %	6	6	1	1	3	3
Mvmt Flow	11	11	685	5	16	380

Major/Minor	Minor1		Major1		Major2	
Conflicting Flow All	1098	685	0	0	685	0
Stage 1	685	-	-	-	-	-
Stage 2	413	-	-	-	-	-
Critical Hdwy	6.46	6.26	-	-	4.13	-
Critical Hdwy Stg 1	5.46	-	-	-	-	-
Critical Hdwy Stg 2	5.46	-	-	-	-	-
Follow-up Hdwy	3.554	3.354	-	-	2.227	-
Pot Cap-1 Maneuver	231	441	-	-	904	-
Stage 1	493	-	-	-	-	-
Stage 2	659	-	-	-	-	-
Platoon blocked, %			-	-		-
Mov Cap-1 Maneuver	227	441	-	-	904	-
Mov Cap-2 Maneuver	356	-	-	-	-	-
Stage 1	493	-	-	-	-	-
Stage 2	647	-	-	-	-	-

Approach	WB	NB	SB
HCM Control Delay, s	14.7	0	0.4
HCM LOS	B		

Minor Lane/Major Mvmt	NBT	NBR	WBLn1	SBL	SBT
Capacity (veh/h)	-	-	394	904	-
HCM Lane V/C Ratio	-	-	0.055	0.018	-
HCM Control Delay (s)	-	-	14.7	9.1	-
HCM Lane LOS	-	-	B	A	-
HCM 95th %tile Q(veh)	-	-	0.2	0.1	-

Lane Group	EBL	EBT	EBR	WBL	WBT	WBR	NBL	NBT	NBR	SBL	SBT	SBR
Lane Configurations												
Volume (vph)	40	45	20	200	25	5	20	680	335	10	345	20
Ideal Flow (vphpl)	1900	1900	1900	1900	1900	1900	1900	1900	1900	1900	1900	1900
Lane Width (ft)	12	12	12	12	12	12	12	12	12	12	12	12
Grade (%)		0%			0%			0%			0%	
Storage Length (ft)	0		0	0		65	100		100	75		0
Storage Lanes	0		0	1		1	1		1	1		0
Taper Length (ft)	100			100			100			100		
Right Turn on Red			No			No			No			No
Link Speed (mph)		25			25			25			25	
Link Distance (ft)		1000			1000			920			1100	
Travel Time (s)		27.3			27.3			25.1			30.0	
Confl. Peds. (#/hr)												
Confl. Bikes (#/hr)												
Peak Hour Factor	0.94	0.94	0.94	0.94	0.94	0.94	0.94	0.94	0.94	0.94	0.94	0.94
Growth Factor	100%	100%	100%	100%	100%	100%	100%	100%	100%	100%	100%	100%
Heavy Vehicles (%)	1%	1%	1%	2%	2%	2%	1%	1%	1%	2%	2%	2%
Bus Blockages (#/hr)	0	0	0	0	0	0	0	0	0	0	0	0
Parking (#/hr)												
Mid-Block Traffic (%)		0%			0%			0%			0%	
Shared Lane Traffic (%)												
Lane Group Flow (vph)	0	112	0	213	32	0	21	723	356	11	388	0
Turn Type	Perm	NA		Perm	NA		Perm	NA	Perm	Perm	NA	
Protected Phases		4			8			6			2	
Permitted Phases	4			8			6		6	2		
Detector Phase	4	4		8	8		6	6	6	2	2	
Switch Phase												
Minimum Initial (s)	8.0	8.0		8.0	8.0		32.0	32.0	32.0	32.0	32.0	
Minimum Split (s)	27.0	27.0		27.0	27.0		36.0	36.0	36.0	36.0	36.0	
Total Split (s)	29.0	29.0		29.0	29.0		36.0	36.0	36.0	36.0	36.0	
Total Split (%)	44.6%	44.6%		44.6%	44.6%		55.4%	55.4%	55.4%	55.4%	55.4%	
Maximum Green (s)	25.0	25.0		25.0	25.0		32.0	32.0	32.0	32.0	32.0	
Yellow Time (s)	3.0	3.0		3.0	3.0		3.0	3.0	3.0	3.0	3.0	
All-Red Time (s)	1.0	1.0		1.0	1.0		1.0	1.0	1.0	1.0	1.0	
Lost Time Adjust (s)		0.0		0.0	0.0		0.0	0.0	0.0	0.0	0.0	
Total Lost Time (s)		4.0		4.0	4.0		4.0	4.0	4.0	4.0	4.0	
Lead/Lag												
Lead-Lag Optimize?												
Vehicle Extension (s)	2.0	2.0		2.0	2.0		3.0	3.0	3.0	3.0	3.0	
Minimum Gap (s)	2.0	2.0		2.0	2.0		3.0	3.0	3.0	3.0	3.0	
Time Before Reduce (s)	0.0	0.0		0.0	0.0		0.0	0.0	0.0	0.0	0.0	
Time To Reduce (s)	0.0	0.0		0.0	0.0		0.0	0.0	0.0	0.0	0.0	
Recall Mode	None	None		None	None		Min	Min	Min	Min	Min	
Walk Time (s)	7.0	7.0		7.0	7.0		7.0	7.0	7.0	7.0	7.0	
Flash Dont Walk (s)	16.0	16.0		16.0	16.0		17.0	17.0	17.0	17.0	17.0	
Pedestrian Calls (#/hr)	0	0		0	0		0	0	0	0	0	
v/c Ratio		0.29		0.63	0.07		0.04	0.63	0.37	0.04	0.35	
Control Delay		17.8		26.5	15.0		5.9	10.9	7.6	6.2	7.1	
Queue Delay		0.0		0.0	0.0		0.0	0.0	0.0	0.0	0.0	

Lane Group	EBL	EBT	EBR	WBL	WBT	WBR	NBL	NBT	NBR	SBL	SBT	SBR
Total Delay		17.8		26.5	15.0		5.9	10.9	7.6	6.2	7.1	
Queue Length 50th (ft)		28		59	8		2	118	46	1	49	
Queue Length 95th (ft)		61		114	23		12	292	121	8	125	
Internal Link Dist (ft)		920			920			840			1020	
Turn Bay Length (ft)							100		100	75		
Base Capacity (vph)		774		669	863		575	1142	971	305	1122	
Starvation Cap Reductn		0		0	0		0	0	0	0	0	
Spillback Cap Reductn		0		0	0		0	0	0	0	0	
Storage Cap Reductn		0		0	0		0	0	0	0	0	
Reduced v/c Ratio		0.14		0.32	0.04		0.04	0.63	0.37	0.04	0.35	

Intersection Summary

Area Type: Other
Cycle Length: 65
Actuated Cycle Length: 53
Natural Cycle: 65
Control Type: Actuated-Uncoordinated

Splits and Phases: 500: Main St & Buntrock Ave/Green Bay Rd

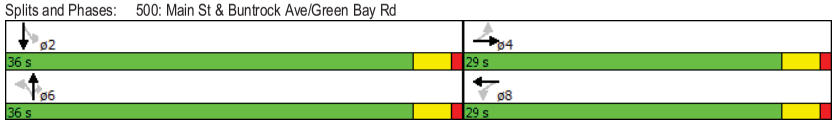

Movement	EBL	EBT	EBR	WBL	WBT	WBR	NBL	NBT	NBR	SBL	SBT	SBR
Lane Configurations												
Volume (veh/h)	40	45	20	200	25	5	20	680	335	10	345	20
Number	7	4	14	3	8	18	1	6	16	5	2	12
Initial Q (Qb), veh	0	0	0	0	0	0	0	0	0	0	0	0
Ped-Bike Adj(A_pbT)	1.00		1.00	1.00		1.00	1.00		1.00	1.00		1.00
Parking Bus, Adj	1.00	1.00	1.00	1.00	1.00	1.00	1.00	1.00	1.00	1.00	1.00	1.00
Adj Sat Flow, veh/h/ln	190.0	188.1	190.0	186.3	186.3	190.0	188.1	188.1	188.1	186.3	186.3	190.0
Adj Flow Rate, veh/h	43	48	21	213	27	5	21	723	356	11	367	21
Adj No. of Lanes	0	1	0	1	1	0	1	1	1	1	1	0
Peak Hour Factor	0.94	0.94	0.94	0.94	0.94	0.94	0.94	0.94	0.94	0.94	0.94	0.94
Percent Heavy Veh, %	1	1	1	2	2	2	1	1	1	2	2	2
Cap, veh/h	213	219	78	403	385	71	627	1126	957	316	1045	60
Arrive On Green	0.25	0.25	0.25	0.25	0.25	0.25	0.60	0.60	0.60	0.60	0.60	0.60
Sat Flow, veh/h	475	870	311	1326	1530	283	1001	1881	1599	521	1745	100
Grp Volume(v), veh/h	112	0	0	213	0	32	21	723	356	11	0	388
Grp Sat Flow(s),veh/h/ln	1656	0	0	1326	0	1813	1001	1881	1599	521	0	1845
Q Serve(g_s), s	0.0	0.0	0.0	8.2	0.0	0.7	0.6	13.4	6.1	0.8	0.0	5.7
Cycle Q Clear(g_c), s	2.6	0.0	0.0	10.8	0.0	0.7	6.3	13.4	6.1	14.1	0.0	5.7
Prop In Lane	0.38		0.19	1.00		0.16	1.00		1.00	1.00		0.05
Lane Grp Cap(c), veh/h	510	0	0	403	0	456	627	1126	957	316	0	1105
V/C Ratio(X)	0.22	0.00	0.00	0.53	0.00	0.07	0.03	0.64	0.37	0.03	0.00	0.35
Avail Cap(c_a), veh/h	857	0	0	690	0	848	627	1126	957	316	0	1105
HCM Platoon Ratio	1.00	1.00	1.00	1.00	1.00	1.00	1.00	1.00	1.00	1.00	1.00	1.00
Upstream Filter(I)	1.00	0.00	0.00	1.00	0.00	1.00	1.00	1.00	1.00	1.00	0.00	1.00
Uniform Delay (d), s/veh	15.9	0.0	0.0	20.2	0.0	15.2	7.0	7.0	5.5	11.6	0.0	5.4
Incr Delay (d2), s/veh	0.1	0.0	0.0	0.4	0.0	0.0	0.0	1.2	0.2	0.0	0.0	0.2
Initial Q Delay(d3),s/veh	0.0	0.0	0.0	0.0	0.0	0.0	0.0	0.0	0.0	0.0	0.0	0.0
%ile BackOfQ(50%),veh/ln	1.3	0.0	0.0	3.0	0.0	0.4	0.2	7.2	2.7	0.1	0.0	2.9
LnGrp Delay(d),s/veh	16.0	0.0	0.0	20.6	0.0	15.3	7.1	8.2	5.8	11.6	0.0	5.6
LnGrp LOS	B			C		B	A	A	A	B		A
Approach Vol, veh/h		112			245			1100			399	
Approach Delay, s/veh		16.0			19.9			7.4			5.8	
Approach LOS		B			B			A			A	

Timer	1	2	3	4	5	6	7	8
Assigned Phs		2		4		6		8
Phs Duration (G+Y+Rc), s		36.0		17.4		36.0		17.4
Change Period (Y+Rc), s		4.0		4.0		4.0		4.0
Max Green Setting (Gmax), s		32.0		25.0		32.0		25.0
Max Q Clear Time (g_c+I1), s		16.1		4.6		15.4		12.8
Green Ext Time (p_c), s		8.6		0.9		8.8		0.7

Intersection Summary

HCM 2010 Ctrl Delay 9.2
HCM 2010 LOS A

Lane Group	EBL	EBR	NBL	NBT	SBT	SBR
Lane Configurations						
Volume (vph)	5	35	30	985	540	10
Ideal Flow (vphpl)	1900	1900	1900	1900	1900	1900
Lane Width (ft)	12	12	12	12	12	12
Grade (%)	0%			0%	0%	
Storage Length (ft)	0	0	25			150
Storage Lanes	1	1	1			1
Taper Length (ft)	100		100			
Link Speed (mph)	25			25	25	
Link Distance (ft)	1000			1000	880	
Travel Time (s)	27.3			27.3	24.0	
Confl. Peds. (#/hr)						
Confl. Bikes (#/hr)						
Peak Hour Factor	0.96	0.96	0.96	0.96	0.96	0.96
Growth Factor	100%	100%	100%	100%	100%	100%
Heavy Vehicles (%)	0%	0%	1%	1%	2%	2%
Bus Blockages (#/hr)	0	0	0	0	0	0
Parking (#/hr)						
Mid-Block Traffic (%)	0%			0%	0%	
Shared Lane Traffic (%)						
Lane Group Flow (vph)	5	36	31	1026	562	10
Sign Control	Stop			Free	Free	

Intersection Summary	
Area Type:	Other
Control Type: Unsignalized	

Intersection	
Int Delay, s/veh	0.5

Movement	EBL	EBR	NBL	NBT	SBT	SBR
Vol, veh/h	5	35	30	985	540	10
Conflicting Peds, #/hr	0	0	0	0	0	0
Sign Control	Stop	Stop	Free	Free	Free	Free
RT Channelized	-	None	-	None	-	None
Storage Length	0	0	25	-	-	150
Veh in Median Storage, #	0	-	-	0	0	-
Grade, %	0	-	-	0	0	-
Peak Hour Factor	96	96	96	96	96	96
Heavy Vehicles, %	0	0	1	1	2	2
Mvmt Flow	5	36	31	1026	562	10

Major/Minor	Minor2		Major1		Major2	
Conflicting Flow All	1652	563	563	0	-	0
Stage 1	563	-	-	-	-	-
Stage 2	1089	-	-	-	-	-
Critical Hdwy	6.4	6.2	4.11	-	-	-
Critical Hdwy Stg 1	5.4	-	-	-	-	-
Critical Hdwy Stg 2	5.4	-	-	-	-	-
Follow-up Hdwy	3.5	3.3	2.209	-	-	-
Pot Cap-1 Maneuver	110	530	1013	-	-	-
Stage 1	574	-	-	-	-	-
Stage 2	326	-	-	-	-	-
Platoon blocked, %				-	-	-
Mov Cap-1 Maneuver	107	530	1013	-	-	-
Mov Cap-2 Maneuver	229	-	-	-	-	-
Stage 1	574	-	-	-	-	-
Stage 2	316	-	-	-	-	-

Approach	EB	NB	SB
HCM Control Delay, s	13.4	0.3	0
HCM LOS	B		

Minor Lane/Major Mvmt	NBL	NBT	EBLn1	EBLn2	SBT	SBR
Capacity (veh/h)	1013	-	229	530	-	-
HCM Lane V/C Ratio	0.031	-	0.023	0.069	-	-
HCM Control Delay (s)	8.7	-	21.1	12.3	-	-
HCM Lane LOS	A	-	C	B	-	-
HCM 95th %tile Q(veh)	0.1	-	0.1	0.2	-	-

APPENDIX C2

PEAK HOUR CAPACITY ANALYSIS WORKSHEETS

DESIGN YEAR 2035
EXISTING TRANSPORTATION SYSTEM

Lane Group	WBL	WBR	NBT	NBR	SBL	SBT
Lane Configurations						
Volume (vph)	50	10	185	10	5	505
Ideal Flow (vphpl)	1900	1900	1900	1900	1900	1900
Lane Width (ft)	12	12	12	12	12	12
Grade (%)	0%		0%			0%
Storage Length (ft)	0	0		65	125	
Storage Lanes	1	0		1	1	
Taper Length (ft)	100				100	
Link Speed (mph)	25		25			30
Link Distance (ft)	1000		950			1000
Travel Time (s)	27.3		25.9			22.7
Confl. Peds. (#/hr)						
Confl. Bikes (#/hr)						
Peak Hour Factor	0.83	0.83	0.83	0.83	0.83	0.83
Growth Factor	100%	100%	100%	100%	100%	100%
Heavy Vehicles (%)	2%	2%	3%	3%	1%	1%
Bus Blockages (#/hr)	0	0	0	0	0	0
Parking (#/hr)						
Mid-Block Traffic (%)	0%		0%			0%
Shared Lane Traffic (%)						
Lane Group Flow (vph)	72	0	223	12	6	608
Sign Control	Stop		Free			Free

Intersection Summary	
Area Type:	Other
Control Type: Unsignalized	

Intersection	
Int Delay, s/veh	1.2

Movement	WBL	WBR	NBT	NBR	SBL	SBT
Vol, veh/h	50	10	185	10	5	505
Conflicting Peds, #/hr	0	0	0	0	0	0
Sign Control	Stop	Stop	Free	Free	Free	Free
RT Channelized	-	None	-	None	-	None
Storage Length	0	-	-	65	125	-
Veh in Median Storage, #	0	-	0	-	-	0
Grade, %	0	-	0	-	-	0
Peak Hour Factor	83	83	83	83	83	83
Heavy Vehicles, %	2	2	3	3	1	1
Mvmt Flow	60	12	223	12	6	608

Major/Minor	Minor1		Major1		Major2	
Conflicting Flow All	843	223	0	0	223	0
Stage 1	223	-	-	-	-	-
Stage 2	620	-	-	-	-	-
Critical Hdwy	6.42	6.22	-	-	4.11	-
Critical Hdwy Stg 1	5.42	-	-	-	-	-
Critical Hdwy Stg 2	5.42	-	-	-	-	-
Follow-up Hdwy	3.518	3.318	-	-	2.209	-
Pot Cap-1 Maneuver	334	817	-	-	1352	-
Stage 1	814	-	-	-	-	-
Stage 2	536	-	-	-	-	-
Platoon blocked, %			-	-		-
Mov Cap-1 Maneuver	333	817	-	-	1352	-
Mov Cap-2 Maneuver	433	-	-	-	-	-
Stage 1	814	-	-	-	-	-
Stage 2	534	-	-	-	-	-

Approach	WB	NB	SB
HCM Control Delay, s	14	0	0.1
HCM LOS	B		

Minor Lane/Major Mvmt	NBT	NBR	WBLn1	SBL	SBT
Capacity (veh/h)	-	-	470	1352	-
HCM Lane V/C Ratio	-	-	0.154	0.004	-
HCM Control Delay (s)	-	-	14	7.7	-
HCM Lane LOS	-	-	B	A	-
HCM 95th %tile Q(veh)	-	-	0.5	0	-

Lane Group	WBL	WBR	NBT	NBR	SBL	SBT
Lane Configurations						
Volume (vph)	25	5	215	5	1	520
Ideal Flow (vphpl)	1900	1900	1900	1900	1900	1900
Lane Width (ft)	12	12	12	12	12	12
Grade (%)	0%		0%			0%
Storage Length (ft)	0	0		75	75	
Storage Lanes	1	0		1	1	
Taper Length (ft)	100				100	
Link Speed (mph)	25		25			25
Link Distance (ft)	1000		180			950
Travel Time (s)	27.3		4.9			25.9
Confl. Peds. (#/hr)						
Confl. Bikes (#/hr)						
Peak Hour Factor	0.80	0.80	0.80	0.80	0.80	0.80
Growth Factor	100%	100%	100%	100%	100%	100%
Heavy Vehicles (%)	0%	0%	4%	4%	1%	1%
Bus Blockages (#/hr)	0	0	0	0	0	0
Parking (#/hr)						
Mid-Block Traffic (%)	0%		0%			0%
Shared Lane Traffic (%)						
Lane Group Flow (vph)	37	0	269	6	1	650
Sign Control	Stop		Free			Free

Intersection Summary	
Area Type:	Other
Control Type: Unsignalized	

Intersection	
Int Delay, s/veh	0.5

Movement	WBL	WBR	NBT	NBR	SBL	SBT
Vol, veh/h	25	5	215	5	1	520
Conflicting Peds, #/hr	0	0	0	0	0	0
Sign Control	Stop	Stop	Free	Free	Free	Free
RT Channelized	-	None	-	None	-	None
Storage Length	0	-	-	75	75	-
Veh in Median Storage, #	0	-	0	-	-	0
Grade, %	0	-	0	-	-	0
Peak Hour Factor	80	80	80	80	80	80
Heavy Vehicles, %	0	0	4	4	1	1
Mvmt Flow	31	6	269	6	1	650

Major/Minor	Minor1		Major1		Major2	
Conflicting Flow All	922	269	0	0	269	0
Stage 1	269	-	-	-	-	-
Stage 2	653	-	-	-	-	-
Critical Hdwy	6.4	6.2	-	-	4.11	-
Critical Hdwy Stg 1	5.4	-	-	-	-	-
Critical Hdwy Stg 2	5.4	-	-	-	-	-
Follow-up Hdwy	3.5	3.3	-	-	2.209	-
Pot Cap-1 Maneuver	302	775	-	-	1300	-
Stage 1	781	-	-	-	-	-
Stage 2	522	-	-	-	-	-
Platoon blocked, %			-	-		-
Mov Cap-1 Maneuver	302	775	-	-	1300	-
Mov Cap-2 Maneuver	413	-	-	-	-	-
Stage 1	781	-	-	-	-	-
Stage 2	522	-	-	-	-	-

Approach	WB	NB	SB
HCM Control Delay, s	13.8	0	0
HCM LOS	B		

Minor Lane/Major Mvmt	NBT	NBR	WBLn1	SBL	SBT
Capacity (veh/h)	-	-	448	1300	-
HCM Lane V/C Ratio	-	-	0.084	0.001	-
HCM Control Delay (s)	-	-	13.8	7.8	-
HCM Lane LOS	-	-	B	A	-
HCM 95th %tile Q(veh)	-	-	0.3	0	-

Lane Group	EBL	EBT	EBR	WBL	WBT	WBR	NBL	NBT	NBR	SBL	SBT	SBR
Lane Configurations												
Volume (vph)	35	45	110	25	95	20	45	165	20	10	455	65
Ideal Flow (vphpl)	1900	1900	1900	1900	1900	1900	1900	1900	1900	1900	1900	1900
Lane Width (ft)	12	12	12	12	12	12	12	12	12	12	12	12
Grade (%)		0%			0%			0%			0%	
Storage Length (ft)	100		0	70		0	70		260	100		0
Storage Lanes	1		0	1		0	1		1	1		0
Taper Length (ft)	100			100			100			100		
Right Turn on Red			No			No			No			No
Link Speed (mph)		25			25			25			25	
Link Distance (ft)		1000			1000			570			320	
Travel Time (s)		27.3			27.3			15.5			8.7	
Confl. Peds. (#/hr)												
Confl. Bikes (#/hr)												
Peak Hour Factor	0.85	0.85	0.85	0.85	0.85	0.85	0.85	0.85	0.85	0.85	0.85	0.85
Growth Factor	100%	100%	100%	100%	100%	100%	100%	100%	100%	100%	100%	100%
Heavy Vehicles (%)	7%	7%	7%	2%	2%	2%	8%	8%	8%	1%	1%	1%
Bus Blockages (#/hr)	0	0	0	0	0	0	0	0	0	0	0	0
Parking (#/hr)												
Mid-Block Traffic (%)		0%			0%			0%			0%	
Shared Lane Traffic (%)												
Lane Group Flow (vph)	41	182	0	29	136	0	53	194	24	12	611	0
Turn Type	Perm	NA		Perm	NA		Perm	NA	Perm	Perm	NA	
Protected Phases		4			8			6			2	
Permitted Phases	4			8			6		6	2		
Detector Phase	4	4		8	8		6	6	6	2	2	
Switch Phase												
Minimum Initial (s)	8.0	8.0		8.0	8.0		32.0	32.0	32.0	32.0	32.0	
Minimum Split (s)	27.0	27.0		27.0	27.0		36.0	36.0	36.0	36.0	36.0	
Total Split (s)	29.0	29.0		29.0	29.0		36.0	36.0	36.0	36.0	36.0	
Total Split (%)	44.6%	44.6%		44.6%	44.6%		55.4%	55.4%	55.4%	55.4%	55.4%	
Maximum Green (s)	25.0	25.0		25.0	25.0		32.0	32.0	32.0	32.0	32.0	
Yellow Time (s)	3.0	3.0		3.0	3.0		3.0	3.0	3.0	3.0	3.0	
All-Red Time (s)	1.0	1.0		1.0	1.0		1.0	1.0	1.0	1.0	1.0	
Lost Time Adjust (s)	0.0	0.0		0.0	0.0		0.0	0.0	0.0	0.0	0.0	
Total Lost Time (s)	4.0	4.0		4.0	4.0		4.0	4.0	4.0	4.0	4.0	
Lead/Lag												
Lead-Lag Optimize?												
Vehicle Extension (s)	2.0	2.0		2.0	2.0		3.0	3.0	3.0	3.0	3.0	
Minimum Gap (s)	2.0	2.0		2.0	2.0		3.0	3.0	3.0	3.0	3.0	
Time Before Reduce (s)	0.0	0.0		0.0	0.0		0.0	0.0	0.0	0.0	0.0	
Time To Reduce (s)	0.0	0.0		0.0	0.0		0.0	0.0	0.0	0.0	0.0	
Recall Mode	None	None		None	None		Min	Min	Min	Min	Min	
Walk Time (s)	7.0	7.0		7.0	7.0		7.0	7.0	7.0	7.0	7.0	
Flash Dont Walk (s)	16.0	16.0		16.0	16.0		14.0	14.0	14.0	14.0	14.0	
Pedestrian Calls (#/hr)	0	0		0	0		0	0	0	0	0	
v/c Ratio	0.16	0.53		0.12	0.34		0.10	0.16	0.02	0.01	0.25	
Control Delay	17.6	23.7		17.0	19.5		5.1	4.7	4.4	4.4	4.5	
Queue Delay	0.0	0.0		0.0	0.0		0.0	0.0	0.0	0.0	0.0	

Lane Group	EBL	EBT	EBR	WBL	WBT	WBR	NBL	NBT	NBR	SBL	SBT	SBR
Total Delay	17.6	23.7		17.0	19.5		5.1	4.7	4.4	4.4	4.5	
Queue Length 50th (ft)	10	49		7	35		5	18	2	1	32	
Queue Length 95th (ft)	28	90		22	68		18	46	9	6	63	
Internal Link Dist (ft)		920			920			490			240	
Turn Bay Length (ft)	100			70			70		260	100		
Base Capacity (vph)	631	841		590	962		519	1233	1048	838	2458	
Starvation Cap Reductn	0	0		0	0		0	0	0	0	0	
Spillback Cap Reductn	0	0		0	0		0	0	0	0	0	
Storage Cap Reductn	0	0		0	0		0	0	0	0	0	
Reduced v/c Ratio	0.06	0.22		0.05	0.14		0.10	0.16	0.02	0.01	0.25	

Intersection Summary

Area Type: Other
Cycle Length: 65
Actuated Cycle Length: 48.2
Natural Cycle: 65
Control Type: Actuated-Uncoordinated

Splits and Phases: 300: Main St & Freistadt Rd

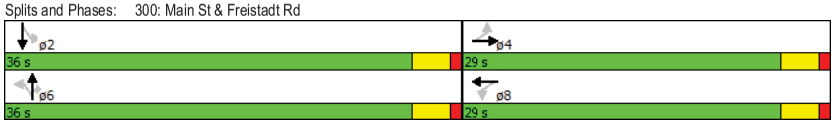

Movement	EBL	EBT	EBR	WBL	WBT	WBR	NBL	NBT	NBR	SBL	SBT	SBR
Lane Configurations												
Volume (veh/h)	35	45	110	25	95	20	45	165	20	10	455	65
Number	7	4	14	3	8	18	1	6	16	5	2	12
Initial Q (Qb), veh	0	0	0	0	0	0	0	0	0	0	0	0
Ped-Bike Adj(A_pbT)	1.00		1.00	1.00		1.00	1.00		1.00	1.00		1.00
Parking Bus, Adj	1.00	1.00	1.00	1.00	1.00	1.00	1.00	1.00	1.00	1.00	1.00	1.00
Adj Sat Flow, veh/h/ln	177.6	177.6	190.0	186.3	186.3	190.0	175.9	175.9	175.9	188.1	188.1	190.0
Adj Flow Rate, veh/h	41	53	129	29	112	24	53	194	24	12	535	76
Adj No. of Lanes	1	1	0	1	1	0	1	1	1	1	2	0
Peak Hour Factor	0.85	0.85	0.85	0.85	0.85	0.85	0.85	0.85	0.85	0.85	0.85	0.85
Percent Heavy Veh, %	7	7	7	2	2	2	8	8	8	1	1	1
Cap, veh/h	298	89	217	252	289	62	581	1134	964	848	2027	287
Arrive On Green	0.19	0.19	0.19	0.19	0.19	0.19	0.64	0.64	0.64	0.64	0.64	0.64
Sat Flow, veh/h	1190	460	1119	1197	1488	319	762	1759	1495	1170	3145	445
Grp Volume(v), veh/h	41	0	182	29	0	136	53	194	24	12	303	308
Grp Sat Flow(s),veh/h/ln	1190	0	1578	1197	0	1806	762	1759	1495	1170	1787	1803
Q Serve(g_s), s	1.5	0.0	5.2	1.1	0.0	3.3	1.6	2.2	0.3	0.2	3.6	3.6
Cycle Q Clear(g_c), s	4.8	0.0	5.2	6.3	0.0	3.3	5.2	2.2	0.3	2.4	3.6	3.6
Prop In Lane	1.00		0.71	1.00		0.18	1.00		1.00	1.00		0.25
Lane Grp Cap(c), veh/h	298	0	307	252	0	351	581	1134	964	848	1152	1162
V/C Ratio(X)	0.14	0.00	0.59	0.12	0.00	0.39	0.09	0.17	0.02	0.01	0.26	0.26
Avail Cap(c_a), veh/h	666	0	795	622	0	910	581	1134	964	848	1152	1162
HCM Platoon Ratio	1.00	1.00	1.00	1.00	1.00	1.00	1.00	1.00	1.00	1.00	1.00	1.00
Upstream Filter(I)	1.00	0.00	1.00	1.00	0.00	1.00	1.00	1.00	1.00	1.00	1.00	1.00
Uniform Delay (d), s/veh	19.5	0.0	18.2	21.1	0.0	17.4	4.9	3.5	3.2	4.0	3.8	3.8
Incr Delay (d2), s/veh	0.1	0.0	0.7	0.1	0.0	0.3	0.1	0.1	0.0	0.0	0.1	0.1
Initial Q Delay(d3),s/veh	0.0	0.0	0.0	0.0	0.0	0.0	0.0	0.0	0.0	0.0	0.0	0.0
%ile BackOfQ(50%),veh/ln	0.5	0.0	2.3	0.4	0.0	1.6	0.3	1.0	0.1	0.1	1.8	1.8
LnGrp Delay(d),s/veh	19.6	0.0	18.9	21.2	0.0	17.7	5.0	3.6	3.2	4.0	3.9	3.9
LnGrp LOS	B		B	C		B	A	A	A	A	A	A
Approach Vol, veh/h		223			165			271			623	
Approach Delay, s/veh		19.0			18.3			3.8			3.9	
Approach LOS		B			B			A			A	

Timer	1	2	3	4	5	6	7	8
Assigned Phs		2		4		6		8
Phs Duration (G+Y+Rc), s		36.0		13.6		36.0		13.6
Change Period (Y+Rc), s		4.0		4.0		4.0		4.0
Max Green Setting (Gmax), s		32.0		25.0		32.0		25.0
Max Q Clear Time (g_c+I1), s		5.6		7.2		7.2		8.3
Green Ext Time (p_c), s		6.3		1.4		6.2		1.4

Intersection Summary	
HCM 2010 Ctrl Delay	8.4
HCM 2010 LOS	A

Lane Group	WBL	WBR	NBT	NBR	SBL	SBT
Lane Configurations						
Volume (vph)	25	1	230	5	10	595
Ideal Flow (vphpl)	1900	1900	1900	1900	1900	1900
Lane Width (ft)	12	12	12	12	12	12
Grade (%)	0%		0%			0%
Storage Length (ft)	0	0		85	115	
Storage Lanes	1	0		1	1	
Taper Length (ft)	100				100	
Link Speed (mph)	25		25			25
Link Distance (ft)	1000		1100			430
Travel Time (s)	27.3		30.0			11.7
Confl. Peds. (#/hr)						
Confl. Bikes (#/hr)						
Peak Hour Factor	0.80	0.80	0.80	0.80	0.80	0.80
Growth Factor	100%	100%	100%	100%	100%	100%
Heavy Vehicles (%)	0%	0%	8%	8%	2%	2%
Bus Blockages (#/hr)	0	0	0	0	0	0
Parking (#/hr)						
Mid-Block Traffic (%)	0%		0%			0%
Shared Lane Traffic (%)						
Lane Group Flow (vph)	32	0	288	6	12	744
Sign Control	Stop		Free			Free

Intersection Summary	
Area Type:	Other

Control Type: Unsignalized

Intersection	
Int Delay, s/veh	0.5

Movement	WBL	WBR	NBT	NBR	SBL	SBT
Vol, veh/h	25	1	230	5	10	595
Conflicting Peds, #/hr	0	0	0	0	0	0
Sign Control	Stop	Stop	Free	Free	Free	Free
RT Channelized	-	None	-	None	-	None
Storage Length	0	-	-	85	115	-
Veh in Median Storage, #	0	-	0	-	-	0
Grade, %	0	-	0	-	-	0
Peak Hour Factor	80	80	80	80	80	80
Heavy Vehicles, %	0	0	8	8	2	2
Mvmt Flow	31	1	288	6	12	744

Major/Minor	Minor1		Major1		Major2	
Conflicting Flow All	1057	288	0	0	288	0
Stage 1	288	-	-	-	-	-
Stage 2	769	-	-	-	-	-
Critical Hdwy	6.4	6.2	-	-	4.12	-
Critical Hdwy Stg 1	5.4	-	-	-	-	-
Critical Hdwy Stg 2	5.4	-	-	-	-	-
Follow-up Hdwy	3.5	3.3	-	-	2.218	-
Pot Cap-1 Maneuver	251	756	-	-	1274	-
Stage 1	766	-	-	-	-	-
Stage 2	461	-	-	-	-	-
Platoon blocked, %			-	-		-
Mov Cap-1 Maneuver	248	756	-	-	1274	-
Mov Cap-2 Maneuver	362	-	-	-	-	-
Stage 1	766	-	-	-	-	-
Stage 2	456	-	-	-	-	-

Approach	WB	NB	SB
HCM Control Delay, s	15.7	0	0.1
HCM LOS	C		

Minor Lane/Major Mvmt	NBT	NBR	WBLn1	SBL	SBT
Capacity (veh/h)	-	-	369	1274	-
HCM Lane V/C Ratio	-	-	0.088	0.01	-
HCM Control Delay (s)	-	-	15.7	7.9	-
HCM Lane LOS	-	-	C	A	-
HCM 95th %tile Q(veh)	-	-	0.3	0	-

Lane Group	EBL	EBT	EBR	WBL	WBT	WBR	NBL	NBT	NBR	SBL	SBT	SBR
Lane Configurations												
Volume (vph)	15	35	40	410	85	10	35	250	130	1	600	45
Ideal Flow (vphpl)	1900	1900	1900	1900	1900	1900	1900	1900	1900	1900	1900	1900
Lane Width (ft)	12	12	12	12	12	12	12	12	12	12	12	12
Grade (%)		0%			0%			0%			0%	
Storage Length (ft)	0		0	0		65	100		100	75		0
Storage Lanes	0		0	1		1	1		1	1		0
Taper Length (ft)	100			100			100			100		
Right Turn on Red			No			No			No			No
Link Speed (mph)		25			25			25			25	
Link Distance (ft)		1000			1000			920			1100	
Travel Time (s)		27.3			27.3			25.1			30.0	
Confl. Peds. (#/hr)												
Confl. Bikes (#/hr)												
Peak Hour Factor	0.77	0.77	0.77	0.77	0.77	0.77	0.77	0.77	0.77	0.77	0.77	0.77
Growth Factor	100%	100%	100%	100%	100%	100%	100%	100%	100%	100%	100%	100%
Heavy Vehicles (%)	4%	4%	4%	3%	3%	3%	5%	5%	5%	2%	2%	2%
Bus Blockages (#/hr)	0	0	0	0	0	0	0	0	0	0	0	0
Parking (#/hr)												
Mid-Block Traffic (%)		0%			0%			0%			0%	
Shared Lane Traffic (%)												
Lane Group Flow (vph)	0	116	0	532	123	0	45	325	169	1	837	0
Turn Type	Perm	NA		Perm	NA		Perm	NA	Perm	Perm	NA	
Protected Phases		4			8			6			2	
Permitted Phases	4			8			6		6	2		
Detector Phase	4	4		8	8		6	6	6	2	2	
Switch Phase												
Minimum Initial (s)	8.0	8.0		8.0	8.0		32.0	32.0	32.0	32.0	32.0	
Minimum Split (s)	27.0	27.0		27.0	27.0		36.0	36.0	36.0	36.0	36.0	
Total Split (s)	29.0	29.0		29.0	29.0		36.0	36.0	36.0	36.0	36.0	
Total Split (%)	44.6%	44.6%		44.6%	44.6%		55.4%	55.4%	55.4%	55.4%	55.4%	
Maximum Green (s)	25.0	25.0		25.0	25.0		32.0	32.0	32.0	32.0	32.0	
Yellow Time (s)	3.0	3.0		3.0	3.0		3.0	3.0	3.0	3.0	3.0	
All-Red Time (s)	1.0	1.0		1.0	1.0		1.0	1.0	1.0	1.0	1.0	
Lost Time Adjust (s)		0.0		0.0	0.0		0.0	0.0	0.0	0.0	0.0	
Total Lost Time (s)		4.0		4.0	4.0		4.0	4.0	4.0	4.0	4.0	
Lead/Lag												
Lead-Lag Optimize?												
Vehicle Extension (s)	2.0	2.0		2.0	2.0		3.0	3.0	3.0	3.0	3.0	
Minimum Gap (s)	2.0	2.0		2.0	2.0		3.0	3.0	3.0	3.0	3.0	
Time Before Reduce (s)	0.0	0.0		0.0	0.0		0.0	0.0	0.0	0.0	0.0	
Time To Reduce (s)	0.0	0.0		0.0	0.0		0.0	0.0	0.0	0.0	0.0	
Recall Mode	None	None		None	None		Min	Min	Min	Min	Min	
Walk Time (s)	7.0	7.0		7.0	7.0		7.0	7.0	7.0	7.0	7.0	
Flash Dont Walk (s)	16.0	16.0		16.0	16.0		17.0	17.0	17.0	17.0	17.0	
Pedestrian Calls (#/hr)	0	0		0	0		0	0	0	0	0	
v/c Ratio		0.18		1.03	0.18		0.41	0.36	0.22	0.00	0.92	
Control Delay		14.3		72.3	14.1		24.1	11.7	10.4	8.0	34.0	
Queue Delay		0.0		0.0	0.0		0.0	0.0	0.0	0.0	0.0	

Lane Group	EBL	EBT	EBR	WBL	WBT	WBR	NBL	NBT	NBR	SBL	SBT	SBR
Total Delay		14.3		72.3	14.1		24.1	11.7	10.4	8.0	34.0	
Queue Length 50th (ft)		30		~220	31		11	74	36	0	288	
Queue Length 95th (ft)		51		#313	53		32	103	57	2	#350	
Internal Link Dist (ft)		920			920			840			1020	
Turn Bay Length (ft)							100		100	75		
Base Capacity (vph)		630		515	698		111	891	757	464	907	
Starvation Cap Reductn		0		0	0		0	0	0	0	0	
Spillback Cap Reductn		0		0	0		0	0	0	0	0	
Storage Cap Reductn		0		0	0		0	0	0	0	0	
Reduced v/c Ratio		0.18		1.03	0.18		0.41	0.36	0.22	0.00	0.92	

Intersection Summary

Area Type: Other
Cycle Length: 65
Actuated Cycle Length: 65
Natural Cycle: 70
Control Type: Actuated-Uncoordinated
~ Volume exceeds capacity, queue is theoretically infinite.
Queue shown is maximum after two cycles.
95th percentile volume exceeds capacity, queue may be longer.
Queue shown is maximum after two cycles.

Splits and Phases: 500: Main St & Buntrock Ave/Green Bay Rd

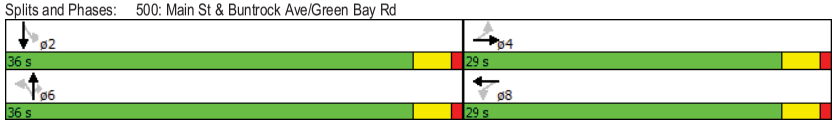

Movement	EBL	EBT	EBR	WBL	WBT	WBR	NBL	NBT	NBR	SBL	SBT	SBR
Lane Configurations												
Volume (veh/h)	15	35	40	410	85	10	35	250	130	1	600	45
Number	7	4	14	3	8	18	1	6	16	5	2	12
Initial Q (Qb), veh	0	0	0	0	0	0	0	0	0	0	0	0
Ped-Bike Adj(A_pbT)	1.00		1.00	1.00		1.00	1.00		1.00	1.00		1.00
Parking Bus, Adj	1.00	1.00	1.00	1.00	1.00	1.00	1.00	1.00	1.00	1.00	1.00	1.00
Adj Sat Flow, veh/h/ln	190.0	182.7	190.0	184.5	184.5	190.0	181.0	181.0	181.0	186.3	186.3	190.0
Adj Flow Rate, veh/h	19	45	52	532	110	13	45	325	169	1	779	58
Adj No. of Lanes	0	1	0	1	1	0	1	1	1	1	1	0
Peak Hour Factor	0.77	0.77	0.77	0.77	0.77	0.77	0.77	0.77	0.77	0.77	0.77	0.77
Percent Heavy Veh, %	4	4	4	3	3	3	5	5	5	2	2	2
Cap, veh/h	128	281	279	545	623	74	154	891	757	454	843	63
Arrive On Green	0.38	0.38	0.38	0.38	0.38	0.38	0.49	0.49	0.49	0.49	0.49	0.49
Sat Flow, veh/h	164	730	727	1281	1619	191	635	1810	1538	899	1713	128
Grp Volume(v), veh/h	116	0	0	532	0	123	45	325	169	1	0	837
Grp Sat Flow(s),veh/h/ln	1621	0	0	1281	0	1811	635	1810	1538	899	0	1840
Q Serve(g_s), s	0.0	0.0	0.0	22.1	0.0	2.9	4.5	7.2	4.1	0.0	0.0	27.5
Cycle Q Clear(g_c), s	2.9	0.0	0.0	25.0	0.0	2.9	32.0	7.2	4.1	7.3	0.0	27.5
Prop In Lane	0.16		0.45	1.00		0.11	1.00		1.00	1.00		0.07
Lane Grp Cap(c), veh/h	688	0	0	545	0	696	154	891	757	454	0	906
V/C Ratio(X)	0.17	0.00	0.00	0.98	0.00	0.18	0.29	0.36	0.22	0.00	0.00	0.92
Avail Cap(c_a), veh/h	688	0	0	545	0	696	154	891	757	454	0	906
HCM Platoon Ratio	1.00	1.00	1.00	1.00	1.00	1.00	1.00	1.00	1.00	1.00	1.00	1.00
Upstream Filter(I)	1.00	0.00	0.00	1.00	0.00	1.00	1.00	1.00	1.00	1.00	0.00	1.00
Uniform Delay (d), s/veh	13.2	0.0	0.0	23.5	0.0	13.2	30.3	10.2	9.4	12.5	0.0	15.4
Incr Delay (d2), s/veh	0.0	0.0	0.0	32.1	0.0	0.0	1.0	0.3	0.1	0.0	0.0	14.8
Initial Q Delay(d3),s/veh	0.0	0.0	0.0	0.0	0.0	0.0	0.0	0.0	0.0	0.0	0.0	0.0
%ile BackOfQ(50%),veh/ln	1.4	0.0	0.0	14.3	0.0	1.4	0.8	3.7	1.7	0.0	0.0	17.4
LnGrp Delay(d),s/veh	13.3	0.0	0.0	55.6	0.0	13.2	31.4	10.5	9.6	12.5	0.0	30.2
LnGrp LOS	B			E		B	C	B	A	B		C
Approach Vol, veh/h		116			655			539			838	
Approach Delay, s/veh		13.3			47.6			11.9			30.2	
Approach LOS		B			D			B			C	

Timer	1	2	3	4	5	6	7	8
Assigned Phs		2		4		6		8
Phs Duration (G+Y+Rc), s		36.0		29.0		36.0		29.0
Change Period (Y+Rc), s		4.0		4.0		4.0		4.0
Max Green Setting (Gmax), s		32.0		25.0		32.0		25.0
Max Q Clear Time (g_c+I1), s		29.5		4.9		34.0		27.0
Green Ext Time (p_c), s		1.9		2.0		0.0		0.0

Intersection Summary	
HCM 2010 Ctrl Delay	30.0
HCM 2010 LOS	C

Lane Group	EBL	EBR	NBL	NBT	SBT	SBR
Lane Configurations						
Volume (vph)	5	70	70	420	975	30
Ideal Flow (vphpl)	1900	1900	1900	1900	1900	1900
Lane Width (ft)	12	12	12	12	12	12
Grade (%)	0%			0%	0%	
Storage Length (ft)	0	0	25			150
Storage Lanes	1	1	1			1
Taper Length (ft)	100		100			
Link Speed (mph)	25			25	25	
Link Distance (ft)	1000			1000	880	
Travel Time (s)	27.3			27.3	24.0	
Confl. Peds. (#/hr)						
Confl. Bikes (#/hr)						
Peak Hour Factor	0.82	0.82	0.82	0.82	0.82	0.82
Growth Factor	100%	100%	100%	100%	100%	100%
Heavy Vehicles (%)	2%	2%	4%	4%	2%	2%
Bus Blockages (#/hr)	0	0	0	0	0	0
Parking (#/hr)						
Mid-Block Traffic (%)	0%			0%	0%	
Shared Lane Traffic (%)						
Lane Group Flow (vph)	6	85	85	512	1189	37
Sign Control	Stop			Free	Free	

Intersection Summary	
Area Type:	Other
Control Type: Unsignalized	

Intersection	
Int Delay, s/veh	2

Movement	EBL	EBR	NBL	NBT	SBT	SBR
Vol, veh/h	5	70	70	420	975	30
Conflicting Peds, #/hr	0	0	0	0	0	0
Sign Control	Stop	Stop	Free	Free	Free	Free
RT Channelized	-	None	-	None	-	None
Storage Length	0	0	25	-	-	150
Veh in Median Storage, #	0	-	-	0	0	-
Grade, %	0	-	-	0	0	-
Peak Hour Factor	82	82	82	82	82	82
Heavy Vehicles, %	2	2	4	4	2	2
Mvmt Flow	6	85	85	512	1189	37

Major/Minor	Minor2		Major1		Major2	
Conflicting Flow All	1872	1189	1189	0	-	0
Stage 1	1189	-	-	-	-	-
Stage 2	683	-	-	-	-	-
Critical Hdwy	6.42	6.22	4.14	-	-	-
Critical Hdwy Stg 1	5.42	-	-	-	-	-
Critical Hdwy Stg 2	5.42	-	-	-	-	-
Follow-up Hdwy	3.518	3.318	2.236	-	-	-
Pot Cap-1 Maneuver	79	229	580	-	-	-
Stage 1	289	-	-	-	-	-
Stage 2	502	-	-	-	-	-
Platoon blocked, %				-	-	-
Mov Cap-1 Maneuver	67	229	580	-	-	-
Mov Cap-2 Maneuver	187	-	-	-	-	-
Stage 1	289	-	-	-	-	-
Stage 2	428	-	-	-	-	-

Approach	EB	NB	SB
HCM Control Delay, s	29.5	1.8	0
HCM LOS	D		

Minor Lane/Major Mvmt	NBL	NBT	EBLn1	EBLn2	SBT	SBR
Capacity (veh/h)	580	-	187	229	-	-
HCM Lane V/C Ratio	0.147	-	0.033	0.373	-	-
HCM Control Delay (s)	12.3	-	24.9	29.8	-	-
HCM Lane LOS	B	-	C	D	-	-
HCM 95th %tile Q(veh)	0.5	-	0.1	1.6	-	-

Lane Group	WBL	WBR	NBT	NBR	SBL	SBT
Lane Configurations						
Volume (vph)	25	5	535	35	15	315
Ideal Flow (vphpl)	1900	1900	1900	1900	1900	1900
Lane Width (ft)	12	12	12	12	12	12
Grade (%)	0%		0%			0%
Storage Length (ft)	0	0		65	125	
Storage Lanes	1	0		1	1	
Taper Length (ft)	100				100	
Link Speed (mph)	25		25			30
Link Distance (ft)	1000		950			1000
Travel Time (s)	27.3		25.9			22.7
Confl. Peds. (#/hr)						
Confl. Bikes (#/hr)						
Peak Hour Factor	0.95	0.95	0.95	0.95	0.95	0.95
Growth Factor	100%	100%	100%	100%	100%	100%
Heavy Vehicles (%)	7%	7%	1%	1%	2%	2%
Bus Blockages (#/hr)	0	0	0	0	0	0
Parking (#/hr)						
Mid-Block Traffic (%)	0%		0%			0%
Shared Lane Traffic (%)						
Lane Group Flow (vph)	31	0	563	37	16	332
Sign Control	Stop		Free			Free

Intersection Summary	
Area Type:	Other
Control Type: Unsignalized	

Intersection	
Int Delay, s/veh	0.6

Movement	WBL	WBR	NBT	NBR	SBL	SBT
Vol, veh/h	25	5	535	35	15	315
Conflicting Peds, #/hr	0	0	0	0	0	0
Sign Control	Stop	Stop	Free	Free	Free	Free
RT Channelized	-	None	-	None	-	None
Storage Length	0	-	-	65	125	-
Veh in Median Storage, #	0	-	0	-	-	0
Grade, %	0	-	0	-	-	0
Peak Hour Factor	95	95	95	95	95	95
Heavy Vehicles, %	7	7	1	1	2	2
Mvmt Flow	26	5	563	37	16	332

Major/Minor	Minor1		Major1		Major2	
Conflicting Flow All	926	563	0	0	563	0
Stage 1	563	-	-	-	-	-
Stage 2	363	-	-	-	-	-
Critical Hdwy	6.47	6.27	-	-	4.12	-
Critical Hdwy Stg 1	5.47	-	-	-	-	-
Critical Hdwy Stg 2	5.47	-	-	-	-	-
Follow-up Hdwy	3.563	3.363	-	-	2.218	-
Pot Cap-1 Maneuver	292	516	-	-	1008	-
Stage 1	560	-	-	-	-	-
Stage 2	693	-	-	-	-	-
Platoon blocked, %			-	-		-
Mov Cap-1 Maneuver	287	516	-	-	1008	-
Mov Cap-2 Maneuver	409	-	-	-	-	-
Stage 1	560	-	-	-	-	-
Stage 2	682	-	-	-	-	-

Approach	WB	NB	SB
HCM Control Delay, s	14.2	0	0.4
HCM LOS	B		

Minor Lane/Major Mvmt	NBT	NBR	WBLn1	SBL	SBT
Capacity (veh/h)	-	-	424	1008	-
HCM Lane V/C Ratio	-	-	0.074	0.016	-
HCM Control Delay (s)	-	-	14.2	8.6	-
HCM Lane LOS	-	-	B	A	-
HCM 95th %tile Q(veh)	-	-	0.2	0	-

Lane Group	WBL	WBR	NBT	NBR	SBL	SBT
Lane Configurations						
Volume (vph)	5	5	615	15	5	320
Ideal Flow (vphpl)	1900	1900	1900	1900	1900	1900
Lane Width (ft)	12	12	12	12	12	12
Grade (%)	0%		0%			0%
Storage Length (ft)	0	0		75	75	
Storage Lanes	1	0		1	1	
Taper Length (ft)	100				100	
Link Speed (mph)	25		25			25
Link Distance (ft)	1000		180			950
Travel Time (s)	27.3		4.9			25.9
Confl. Peds. (#/hr)						
Confl. Bikes (#/hr)						
Peak Hour Factor	0.89	0.89	0.89	0.89	0.89	0.89
Growth Factor	100%	100%	100%	100%	100%	100%
Heavy Vehicles (%)	0%	0%	1%	1%	1%	1%
Bus Blockages (#/hr)	0	0	0	0	0	0
Parking (#/hr)						
Mid-Block Traffic (%)	0%		0%			0%
Shared Lane Traffic (%)						
Lane Group Flow (vph)	12	0	691	17	6	360
Sign Control	Stop		Free			Free

Intersection Summary	
Area Type:	Other
Control Type: Unsignalized	

Intersection	
Int Delay, s/veh	0.2

Movement	WBL	WBR	NBT	NBR	SBL	SBT
Vol, veh/h	5	5	615	15	5	320
Conflicting Peds, #/hr	0	0	0	0	0	0
Sign Control	Stop	Stop	Free	Free	Free	Free
RT Channelized	-	None	-	None	-	None
Storage Length	0	-	-	75	75	-
Veh in Median Storage, #	0	-	0	-	-	0
Grade, %	0	-	0	-	-	0
Peak Hour Factor	89	89	89	89	89	89
Heavy Vehicles, %	0	0	1	1	1	1
Mvmt Flow	6	6	691	17	6	360

Major/Minor	Minor1		Major1		Major2	
Conflicting Flow All	1062	691	0	0	691	0
Stage 1	691	-	-	-	-	-
Stage 2	371	-	-	-	-	-
Critical Hdwy	6.4	6.2	-	-	4.11	-
Critical Hdwy Stg 1	5.4	-	-	-	-	-
Critical Hdwy Stg 2	5.4	-	-	-	-	-
Follow-up Hdwy	3.5	3.3	-	-	2.209	-
Pot Cap-1 Maneuver	250	448	-	-	908	-
Stage 1	501	-	-	-	-	-
Stage 2	702	-	-	-	-	-
Platoon blocked, %			-	-		-
Mov Cap-1 Maneuver	248	448	-	-	908	-
Mov Cap-2 Maneuver	374	-	-	-	-	-
Stage 1	501	-	-	-	-	-
Stage 2	697	-	-	-	-	-

Approach	WB	NB	SB
HCM Control Delay, s	14.1	0	0.1
HCM LOS	B		

Minor Lane/Major Mvmt	NBT	NBR	WBLn1	SBL	SBT
Capacity (veh/h)	-	-	408	908	-
HCM Lane V/C Ratio	-	-	0.028	0.006	-
HCM Control Delay (s)	-	-	14.1	9	-
HCM Lane LOS	-	-	B	A	-
HCM 95th %tile Q(veh)	-	-	0.1	0	-

Lane Group	EBL	EBT	EBR	WBL	WBT	WBR	NBL	NBT	NBR	SBL	SBT	SBR
Lane Configurations												
Volume (vph)	65	105	100	50	90	25	135	530	50	25	260	50
Ideal Flow (vphpl)	1900	1900	1900	1900	1900	1900	1900	1900	1900	1900	1900	1900
Lane Width (ft)	12	12	12	12	12	12	12	12	12	12	12	12
Grade (%)		0%			0%			0%			0%	
Storage Length (ft)	100		0	70		0	70		260	100		0
Storage Lanes	1		0	1		0	1		1	1		0
Taper Length (ft)	100			100			100			100		
Right Turn on Red			No			No			No			No
Link Speed (mph)		25			25			25			25	
Link Distance (ft)		1000			1000			570			320	
Travel Time (s)		27.3			27.3			15.5			8.7	
Confl. Peds. (#/hr)												
Confl. Bikes (#/hr)												
Peak Hour Factor	0.86	0.86	0.86	0.86	0.86	0.86	0.86	0.86	0.86	0.86	0.86	0.86
Growth Factor	100%	100%	100%	100%	100%	100%	100%	100%	100%	100%	100%	100%
Heavy Vehicles (%)	0%	0%	0%	2%	2%	2%	1%	1%	1%	1%	1%	1%
Bus Blockages (#/hr)	0	0	0	0	0	0	0	0	0	0	0	0
Parking (#/hr)												
Mid-Block Traffic (%)		0%			0%			0%			0%	
Shared Lane Traffic (%)												
Lane Group Flow (vph)	76	238	0	58	134	0	157	616	58	29	360	0
Turn Type	Perm	NA		Perm	NA		Perm	NA	Perm	Perm	NA	
Protected Phases		4			8			6			2	
Permitted Phases	4			8			6		6	2		
Detector Phase	4	4		8	8		6	6	6	2	2	
Switch Phase												
Minimum Initial (s)	8.0	8.0		8.0	8.0		32.0	32.0	32.0	32.0	32.0	
Minimum Split (s)	27.0	27.0		27.0	27.0		36.0	36.0	36.0	36.0	36.0	
Total Split (s)	29.0	29.0		29.0	29.0		36.0	36.0	36.0	36.0	36.0	
Total Split (%)	44.6%	44.6%		44.6%	44.6%		55.4%	55.4%	55.4%	55.4%	55.4%	
Maximum Green (s)	25.0	25.0		25.0	25.0		32.0	32.0	32.0	32.0	32.0	
Yellow Time (s)	3.0	3.0		3.0	3.0		3.0	3.0	3.0	3.0	3.0	
All-Red Time (s)	1.0	1.0		1.0	1.0		1.0	1.0	1.0	1.0	1.0	
Lost Time Adjust (s)	0.0	0.0		0.0	0.0		0.0	0.0	0.0	0.0	0.0	
Total Lost Time (s)	4.0	4.0		4.0	4.0		4.0	4.0	4.0	4.0	4.0	
Lead/Lag												
Lead-Lag Optimize?												
Vehicle Extension (s)	2.0	2.0		2.0	2.0		3.0	3.0	3.0	3.0	3.0	
Minimum Gap (s)	2.0	2.0		2.0	2.0		3.0	3.0	3.0	3.0	3.0	
Time Before Reduce (s)	0.0	0.0		0.0	0.0		0.0	0.0	0.0	0.0	0.0	
Time To Reduce (s)	0.0	0.0		0.0	0.0		0.0	0.0	0.0	0.0	0.0	
Recall Mode	None	None		None	None		Min	Min	Min	Min	Min	
Walk Time (s)	7.0	7.0		7.0	7.0		7.0	7.0	7.0	7.0	7.0	
Flash Dont Walk (s)	16.0	16.0		16.0	16.0		14.0	14.0	14.0	14.0	14.0	
Pedestrian Calls (#/hr)	0	0		0	0		0	0	0	0	0	
v/c Ratio	0.27	0.60		0.28	0.33		0.25	0.53	0.06	0.07	0.17	
Control Delay	18.6	24.7		19.8	18.8		6.6	8.4	5.0	5.6	5.0	
Queue Delay	0.0	0.0		0.0	0.0		0.0	0.0	0.0	0.0	0.0	

Lane Group	EBL	EBT	EBR	WBL	WBT	WBR	NBL	NBT	NBR	SBL	SBT	SBR
Total Delay	18.6	24.7		19.8	18.8		6.6	8.4	5.0	5.6	5.0	
Queue Length 50th (ft)	19	65		15	34		17	84	6	3	19	
Queue Length 95th (ft)	44	114		37	67		51	190	20	13	43	
Internal Link Dist (ft)		920			920			490			240	
Turn Bay Length (ft)	100			70			70		260	100		
Base Capacity (vph)	618	854		451	874		627	1167	992	406	2165	
Starvation Cap Reductn	0	0		0	0		0	0	0	0	0	
Spillback Cap Reductn	0	0		0	0		0	0	0	0	0	
Storage Cap Reductn	0	0		0	0		0	0	0	0	0	
Reduced v/c Ratio	0.12	0.28		0.13	0.15		0.25	0.53	0.06	0.07	0.17	

Intersection Summary

Area Type: Other
Cycle Length: 65
Actuated Cycle Length: 51.7
Natural Cycle: 65
Control Type: Actuated-Uncoordinated

Splits and Phases: 300: Main St & Freistadt Rd

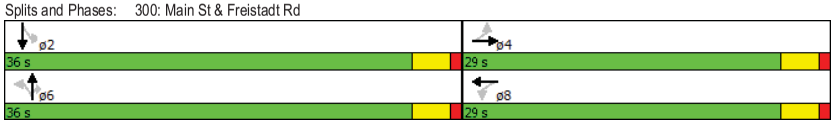

Movement	EBL	EBT	EBR	WBL	WBT	WBR	NBL	NBT	NBR	SBL	SBT	SBR
Lane Configurations												
Volume (veh/h)	65	105	100	50	90	25	135	530	50	25	260	50
Number	7	4	14	3	8	18	1	6	16	5	2	12
Initial Q (Qb), veh	0	0	0	0	0	0	0	0	0	0	0	0
Ped-Bike Adj(A_pbT)	1.00		1.00	1.00		1.00	1.00		1.00	1.00		1.00
Parking Bus, Adj	1.00	1.00	1.00	1.00	1.00	1.00	1.00	1.00	1.00	1.00	1.00	1.00
Adj Sat Flow, veh/h/ln	190.0	190.0	190.0	186.3	186.3	190.0	188.1	188.1	188.1	188.1	188.1	190.0
Adj Flow Rate, veh/h	76	122	116	58	105	29	157	616	58	29	302	58
Adj No. of Lanes	1	1	0	1	1	0	1	1	1	1	2	0
Peak Hour Factor	0.86	0.86	0.86	0.86	0.86	0.86	0.86	0.86	0.86	0.86	0.86	0.86
Percent Heavy Veh, %	0	0	0	2	2	2	1	1	1	1	1	1
Cap, veh/h	360	212	202	270	332	92	720	1149	977	461	1832	347
Arrive On Green	0.24	0.24	0.24	0.24	0.24	0.24	0.61	0.61	0.61	0.61	0.61	0.61
Sat Flow, veh/h	1275	897	853	1138	1406	388	1027	1881	1599	769	2999	569
Grp Volume(v), veh/h	76	0	238	58	0	134	157	616	58	29	178	182
Grp Sat Flow(s),veh/h/ln	1275	0	1750	1138	0	1794	1027	1881	1599	769	1787	1781
Q Serve(g_s), s	2.7	0.0	6.3	2.5	0.0	3.2	4.1	9.9	0.8	1.2	2.3	2.3
Cycle Q Clear(g_c), s	6.0	0.0	6.3	8.8	0.0	3.2	6.4	9.9	0.8	11.1	2.3	2.3
Prop In Lane	1.00		0.49	1.00		0.22	1.00		1.00	1.00		0.32
Lane Grp Cap(c), veh/h	360	0	414	270	0	424	720	1149	977	461	1092	1088
V/C Ratio(X)	0.21	0.00	0.58	0.22	0.00	0.32	0.22	0.54	0.06	0.06	0.16	0.17
Avail Cap(c_a), veh/h	667	0	835	544	0	856	720	1149	977	461	1092	1088
HCM Platoon Ratio	1.00	1.00	1.00	1.00	1.00	1.00	1.00	1.00	1.00	1.00	1.00	1.00
Upstream Filter(I)	1.00	0.00	1.00	1.00	0.00	1.00	1.00	1.00	1.00	1.00	1.00	1.00
Uniform Delay (d), s/veh	19.0	0.0	17.7	21.6	0.0	16.5	5.8	5.9	4.1	9.1	4.4	4.4
Incr Delay (d2), s/veh	0.1	0.0	0.5	0.1	0.0	0.2	0.2	0.5	0.0	0.1	0.1	0.1
Initial Q Delay(d3),s/veh	0.0	0.0	0.0	0.0	0.0	0.0	0.0	0.0	0.0	0.0	0.0	0.0
%ile BackOfQ(50%),veh/ln	1.0	0.0	3.1	0.8	0.0	1.6	1.2	5.1	0.3	0.3	1.1	1.1
LnGrp Delay(d),s/veh	19.1	0.0	18.1	21.7	0.0	16.7	6.0	6.4	4.1	9.2	4.5	4.5
LnGrp LOS	B		B	C		B	A	A	A	A	A	A
Approach Vol, veh/h		314			192			831			389	
Approach Delay, s/veh		18.4			18.2			6.2			4.8	
Approach LOS		B			B			A			A	

Timer	1	2	3	4	5	6	7	8
Assigned Phs		2		4		6		8
Phs Duration (G+Y+Rc), s		36.0		16.4		36.0		16.4
Change Period (Y+Rc), s		4.0		4.0		4.0		4.0
Max Green Setting (Gmax), s		32.0		25.0		32.0		25.0
Max Q Clear Time (g_c+I1), s		13.1		8.3		11.9		10.8
Green Ext Time (p_c), s		7.8		1.7		8.1		1.6

Intersection Summary	
HCM 2010 Ctrl Delay	9.4
HCM 2010 LOS	A

Lane Group	WBL	WBR	NBT	NBR	SBL	SBT
Lane Configurations						
Volume (vph)	10	10	775	5	15	455
Ideal Flow (vphpl)	1900	1900	1900	1900	1900	1900
Lane Width (ft)	12	12	12	12	12	12
Grade (%)	0%		0%			0%
Storage Length (ft)	0	0		85	115	
Storage Lanes	1	0		1	1	
Taper Length (ft)	100				100	
Link Speed (mph)	25		25			25
Link Distance (ft)	1000		1100			430
Travel Time (s)	27.3		30.0			11.7
Confl. Peds. (#/hr)						
Confl. Bikes (#/hr)						
Peak Hour Factor	0.92	0.92	0.92	0.92	0.92	0.92
Growth Factor	100%	100%	100%	100%	100%	100%
Heavy Vehicles (%)	6%	6%	1%	1%	3%	3%
Bus Blockages (#/hr)	0	0	0	0	0	0
Parking (#/hr)						
Mid-Block Traffic (%)	0%		0%			0%
Shared Lane Traffic (%)						
Lane Group Flow (vph)	22	0	842	5	16	495
Sign Control	Stop		Free			Free

Intersection Summary	
Area Type:	Other

Control Type: Unsignalized

Intersection	
Int Delay, s/veh	0.4

Movement	WBL	WBR	NBT	NBR	SBL	SBT
Vol, veh/h	10	10	775	5	15	455
Conflicting Peds, #/hr	0	0	0	0	0	0
Sign Control	Stop	Stop	Free	Free	Free	Free
RT Channelized	-	None	-	None	-	None
Storage Length	0	-	-	85	115	-
Veh in Median Storage, #	0	-	0	-	-	0
Grade, %	0	-	0	-	-	0
Peak Hour Factor	92	92	92	92	92	92
Heavy Vehicles, %	6	6	1	1	3	3
Mvmt Flow	11	11	842	5	16	495

Major/Minor	Minor1		Major1		Major2	
Conflicting Flow All	1369	842	0	0	842	0
Stage 1	842	-	-	-	-	-
Stage 2	527	-	-	-	-	-
Critical Hdwy	6.46	6.26	-	-	4.13	-
Critical Hdwy Stg 1	5.46	-	-	-	-	-
Critical Hdwy Stg 2	5.46	-	-	-	-	-
Follow-up Hdwy	3.554	3.354	-	-	2.227	-
Pot Cap-1 Maneuver	158	358	-	-	789	-
Stage 1	416	-	-	-	-	-
Stage 2	584	-	-	-	-	-
Platoon blocked, %			-	-		-
Mov Cap-1 Maneuver	155	358	-	-	789	-
Mov Cap-2 Maneuver	288	-	-	-	-	-
Stage 1	416	-	-	-	-	-
Stage 2	572	-	-	-	-	-

Approach	WB	NB	SB
HCM Control Delay, s	17.1	0	0.3
HCM LOS	C		

Minor Lane/Major Mvmt	NBT	NBR	WBLn1	SBL	SBT
Capacity (veh/h)	-	-	319	789	-
HCM Lane V/C Ratio	-	-	0.068	0.021	-
HCM Control Delay (s)	-	-	17.1	9.7	-
HCM Lane LOS	-	-	C	A	-
HCM 95th %tile Q(veh)	-	-	0.2	0.1	-

Lane Group	EBL	EBT	EBR	WBL	WBT	WBR	NBL	NBT	NBR	SBL	SBT	SBR
Lane Configurations												
Volume (vph)	40	50	25	240	30	5	25	830	390	10	450	25
Ideal Flow (vphpl)	1900	1900	1900	1900	1900	1900	1900	1900	1900	1900	1900	1900
Lane Width (ft)	12	12	12	12	12	12	12	12	12	12	12	12
Grade (%)		0%			0%			0%			0%	
Storage Length (ft)	0		0	0		65	100		100	75		0
Storage Lanes	0		0	1		1	1		1	1		0
Taper Length (ft)	100			100			100			100		
Right Turn on Red			No			No			No			No
Link Speed (mph)		25			25			25			25	
Link Distance (ft)		1000			1000			920			1100	
Travel Time (s)		27.3			27.3			25.1			30.0	
Confl. Peds. (#/hr)												
Confl. Bikes (#/hr)												
Peak Hour Factor	0.94	0.94	0.94	0.94	0.94	0.94	0.94	0.94	0.94	0.94	0.94	0.94
Growth Factor	100%	100%	100%	100%	100%	100%	100%	100%	100%	100%	100%	100%
Heavy Vehicles (%)	1%	1%	1%	2%	2%	2%	1%	1%	1%	2%	2%	2%
Bus Blockages (#/hr)	0	0	0	0	0	0	0	0	0	0	0	0
Parking (#/hr)												
Mid-Block Traffic (%)		0%			0%			0%			0%	
Shared Lane Traffic (%)												
Lane Group Flow (vph)	0	123	0	255	37	0	27	883	415	11	506	0
Turn Type	Perm	NA		Perm	NA		Perm	NA	Perm	Perm	NA	
Protected Phases		4			8			6			2	
Permitted Phases	4			8			6		6	2		
Detector Phase	4	4		8	8		6	6	6	2	2	
Switch Phase												
Minimum Initial (s)	8.0	8.0		8.0	8.0		32.0	32.0	32.0	32.0	32.0	
Minimum Split (s)	27.0	27.0		27.0	27.0		36.0	36.0	36.0	36.0	36.0	
Total Split (s)	29.0	29.0		29.0	29.0		36.0	36.0	36.0	36.0	36.0	
Total Split (%)	44.6%	44.6%		44.6%	44.6%		55.4%	55.4%	55.4%	55.4%	55.4%	
Maximum Green (s)	25.0	25.0		25.0	25.0		32.0	32.0	32.0	32.0	32.0	
Yellow Time (s)	3.0	3.0		3.0	3.0		3.0	3.0	3.0	3.0	3.0	
All-Red Time (s)	1.0	1.0		1.0	1.0		1.0	1.0	1.0	1.0	1.0	
Lost Time Adjust (s)		0.0		0.0	0.0		0.0	0.0	0.0	0.0	0.0	
Total Lost Time (s)		4.0		4.0	4.0		4.0	4.0	4.0	4.0	4.0	
Lead/Lag												
Lead-Lag Optimize?												
Vehicle Extension (s)	2.0	2.0		2.0	2.0		3.0	3.0	3.0	3.0	3.0	
Minimum Gap (s)	2.0	2.0		2.0	2.0		3.0	3.0	3.0	3.0	3.0	
Time Before Reduce (s)	0.0	0.0		0.0	0.0		0.0	0.0	0.0	0.0	0.0	
Time To Reduce (s)	0.0	0.0		0.0	0.0		0.0	0.0	0.0	0.0	0.0	
Recall Mode	None	None		None	None		Min	Min	Min	Min	Min	
Walk Time (s)	7.0	7.0		7.0	7.0		7.0	7.0	7.0	7.0	7.0	
Flash Dont Walk (s)	16.0	16.0		16.0	16.0		17.0	17.0	17.0	17.0	17.0	
Pedestrian Calls (#/hr)	0	0		0	0		0	0	0	0	0	
v/c Ratio		0.28		0.70	0.08		0.06	0.80	0.44	0.07	0.47	
Control Delay		16.9		29.0	14.4		7.3	18.7	9.6	8.4	9.5	
Queue Delay		0.0		0.0	0.0		0.0	0.0	0.0	0.0	0.0	

Lane Group	EBL	EBT	EBR	WBL	WBT	WBR	NBL	NBT	NBR	SBL	SBT	SBR
Total Delay		16.9		29.0	14.4		7.3	18.7	9.6	8.4	9.5	
Queue Length 50th (ft)		31		74	9		3	192	64	1	80	
Queue Length 95th (ft)		65		138	26		16	#536	168	10	201	
Internal Link Dist (ft)		920			920			840			1020	
Turn Bay Length (ft)							100		100	75		
Base Capacity (vph)		753		623	836		447	1103	938	163	1084	
Starvation Cap Reductn		0		0	0		0	0	0	0	0	
Spillback Cap Reductn		0		0	0		0	0	0	0	0	
Storage Cap Reductn		0		0	0		0	0	0	0	0	
Reduced v/c Ratio		0.16		0.41	0.04		0.06	0.80	0.44	0.07	0.47	

Intersection Summary

Area Type: Other
Cycle Length: 65
Actuated Cycle Length: 55
Natural Cycle: 65
Control Type: Actuated-Uncoordinated
95th percentile volume exceeds capacity, queue may be longer.
Queue shown is maximum after two cycles.

Splits and Phases: 500: Main St & Buntrock Ave/Green Bay Rd

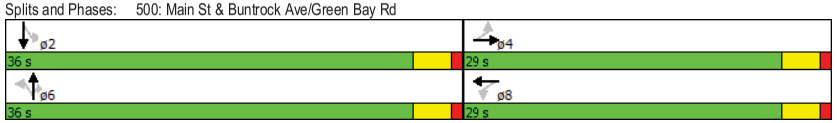

Movement	EBL	EBT	EBR	WBL	WBT	WBR	NBL	NBT	NBR	SBL	SBT	SBR
Lane Configurations												
Volume (veh/h)	40	50	25	240	30	5	25	830	390	10	450	25
Number	7	4	14	3	8	18	1	6	16	5	2	12
Initial Q (Qb), veh	0	0	0	0	0	0	0	0	0	0	0	0
Ped-Bike Adj(A_pbT)	1.00		1.00	1.00		1.00	1.00		1.00	1.00		1.00
Parking Bus, Adj	1.00	1.00	1.00	1.00	1.00	1.00	1.00	1.00	1.00	1.00	1.00	1.00
Adj Sat Flow, veh/h/ln	190.0	188.1	190.0	186.3	186.3	190.0	188.1	188.1	188.1	186.3	186.3	190.0
Adj Flow Rate, veh/h	43	53	27	255	32	5	27	883	415	11	479	27
Adj No. of Lanes	0	1	0	1	1	0	1	1	1	1	1	0
Peak Hour Factor	0.94	0.94	0.94	0.94	0.94	0.94	0.94	0.94	0.94	0.94	0.94	0.94
Percent Heavy Veh, %	1	1	1	2	2	2	1	1	1	2	2	2
Cap, veh/h	212	245	104	436	450	70	496	1074	913	210	998	56
Arrive On Green	0.29	0.29	0.29	0.29	0.29	0.29	0.57	0.57	0.57	0.57	0.57	0.57
Sat Flow, veh/h	437	857	364	1313	1573	246	898	1881	1599	423	1747	98
Grp Volume(v), veh/h	123	0	0	255	0	37	27	883	415	11	0	506
Grp Sat Flow(s),veh/h/ln	1658	0	0	1313	0	1819	898	1881	1599	423	0	1845
Q Serve(g_s), s	0.0	0.0	0.0	10.3	0.0	0.8	1.0	21.3	8.4	1.2	0.0	9.1
Cycle Q Clear(g_c), s	2.9	0.0	0.0	13.3	0.0	0.8	10.1	21.3	8.4	22.5	0.0	9.1
Prop In Lane	0.35		0.22	1.00		0.14	1.00		1.00	1.00		0.05
Lane Grp Cap(c), veh/h	561	0	0	436	0	521	496	1074	913	210	0	1054
V/C Ratio(X)	0.22	0.00	0.00	0.58	0.00	0.07	0.05	0.82	0.45	0.05	0.00	0.48
Avail Cap(c_a), veh/h	819	0	0	646	0	812	496	1074	913	210	0	1054
HCM Platoon Ratio	1.00	1.00	1.00	1.00	1.00	1.00	1.00	1.00	1.00	1.00	1.00	1.00
Upstream Filter(I)	1.00	0.00	0.00	1.00	0.00	1.00	1.00	1.00	1.00	1.00	0.00	1.00
Uniform Delay (d), s/veh	15.3	0.0	0.0	20.4	0.0	14.6	10.1	9.7	7.0	18.8	0.0	7.1
Incr Delay (d2), s/veh	0.1	0.0	0.0	0.5	0.0	0.0	0.0	5.2	0.4	0.1	0.0	0.3
Initial Q Delay(d3),s/veh	0.0	0.0	0.0	0.0	0.0	0.0	0.0	0.0	0.0	0.0	0.0	0.0
%ile BackOfQ(50%),veh/ln	1.4	0.0	0.0	3.8	0.0	0.4	0.3	12.4	3.8	0.1	0.0	4.6
LnGrp Delay(d),s/veh	15.4	0.0	0.0	20.9	0.0	14.6	10.1	14.9	7.3	18.9	0.0	7.4
LnGrp LOS	B			C		B	B	B	A	B		A
Approach Vol, veh/h		123			292			1325			517	
Approach Delay, s/veh		15.4			20.1			12.5			7.7	
Approach LOS		B			C			B			A	

Timer	1	2	3	4	5	6	7	8
Assigned Phs		2		4		6		8
Phs Duration (G+Y+Rc), s		36.0		20.0		36.0		20.0
Change Period (Y+Rc), s		4.0		4.0		4.0		4.0
Max Green Setting (Gmax), s		32.0		25.0		32.0		25.0
Max Q Clear Time (g_c+I1), s		24.5		4.9		23.3		15.3
Green Ext Time (p_c), s		5.9		1.0		6.7		0.8

Intersection Summary

HCM 2010 Ctrl Delay	12.5
HCM 2010 LOS	B

Lane Group	EBL	EBR	NBL	NBT	SBT	SBR
Lane Configurations						
Volume (vph)	5	40	30	1190	680	15
Ideal Flow (vphpl)	1900	1900	1900	1900	1900	1900
Lane Width (ft)	12	12	12	12	12	12
Grade (%)	0%			0%	0%	
Storage Length (ft)	0	0	25			150
Storage Lanes	1	1	1			1
Taper Length (ft)	100		100			
Link Speed (mph)	25			25	25	
Link Distance (ft)	1000			1000	880	
Travel Time (s)	27.3			27.3	24.0	
Confl. Peds. (#/hr)						
Confl. Bikes (#/hr)						
Peak Hour Factor	0.96	0.96	0.96	0.96	0.96	0.96
Growth Factor	100%	100%	100%	100%	100%	100%
Heavy Vehicles (%)	0%	0%	1%	1%	2%	2%
Bus Blockages (#/hr)	0	0	0	0	0	0
Parking (#/hr)						
Mid-Block Traffic (%)	0%			0%	0%	
Shared Lane Traffic (%)						
Lane Group Flow (vph)	5	42	31	1240	708	16
Sign Control	Stop			Free	Free	

Intersection Summary	
Area Type:	Other
Control Type: Unsignalized	

Intersection	
Int Delay, s/veh	0.5

Movement	EBL	EBR	NBL	NBT	SBT	SBR
Vol, veh/h	5	40	30	1190	680	15
Conflicting Peds, #/hr	0	0	0	0	0	0
Sign Control	Stop	Stop	Free	Free	Free	Free
RT Channelized	-	None	-	None	-	None
Storage Length	0	0	25	-	-	150
Veh in Median Storage, #	0	-	-	0	0	-
Grade, %	0	-	-	0	0	-
Peak Hour Factor	96	96	96	96	96	96
Heavy Vehicles, %	0	0	1	1	2	2
Mvmt Flow	5	42	31	1240	708	16

Major/Minor	Minor2		Major1		Major2	
Conflicting Flow All	2010	708	708	0	-	0
Stage 1	708	-	-	-	-	-
Stage 2	1302	-	-	-	-	-
Critical Hdwy	6.4	6.2	4.11	-	-	-
Critical Hdwy Stg 1	5.4	-	-	-	-	-
Critical Hdwy Stg 2	5.4	-	-	-	-	-
Follow-up Hdwy	3.5	3.3	2.209	-	-	-
Pot Cap-1 Maneuver	66	438	895	-	-	-
Stage 1	492	-	-	-	-	-
Stage 2	257	-	-	-	-	-
Platoon blocked, %				-	-	-
Mov Cap-1 Maneuver	64	438	895	-	-	-
Mov Cap-2 Maneuver	176	-	-	-	-	-
Stage 1	492	-	-	-	-	-
Stage 2	248	-	-	-	-	-

Approach	EB	NB	SB
HCM Control Delay, s	15.4	0.2	0
HCM LOS	C		

Minor Lane/Major Mvmt	NBL	NBT	EBLn1	EBLn2	SBT	SBR
Capacity (veh/h)	895	-	176	438	-	-
HCM Lane V/C Ratio	0.035	-	0.03	0.095	-	-
HCM Control Delay (s)	9.2	-	26.1	14.1	-	-
HCM Lane LOS	A	-	D	B	-	-
HCM 95th %tile Q(veh)	0.1	-	0.1	0.3	-	-

APPENDIX C3

PEAK HOUR CAPACITY ANALYSIS WORKSHEETS

DESIGN YEAR 2035 IMPROVED TRANSPORTATION SYSTEM

Lane Group	WBL	WBR	NBT	NBR	SBL	SBT
Lane Configurations						
Volume (vph)	50	10	185	10	5	505
Ideal Flow (vphpl)	1900	1900	1900	1900	1900	1900
Lane Width (ft)	12	12	12	12	12	12
Grade (%)	0%		0%			0%
Storage Length (ft)	0	0		65	125	
Storage Lanes	1	0		1	1	
Taper Length (ft)	100				100	
Link Speed (mph)	25		25			30
Link Distance (ft)	1000		950			1000
Travel Time (s)	27.3		25.9			22.7
Confl. Peds. (#/hr)						
Confl. Bikes (#/hr)						
Peak Hour Factor	0.83	0.83	0.83	0.83	0.83	0.83
Growth Factor	100%	100%	100%	100%	100%	100%
Heavy Vehicles (%)	2%	2%	3%	3%	1%	1%
Bus Blockages (#/hr)	0	0	0	0	0	0
Parking (#/hr)						
Mid-Block Traffic (%)	0%		0%			0%
Shared Lane Traffic (%)						
Lane Group Flow (vph)	72	0	223	12	6	608
Sign Control	Stop		Free			Free

Intersection Summary	
Area Type:	Other
Control Type: Unsignalized	

Intersection	
Int Delay, s/veh	1.2

Movement	WBL	WBR	NBT	NBR	SBL	SBT
Vol, veh/h	50	10	185	10	5	505
Conflicting Peds, #/hr	0	0	0	0	0	0
Sign Control	Stop	Stop	Free	Free	Free	Free
RT Channelized	-	None	-	None	-	None
Storage Length	0	-	-	65	125	-
Veh in Median Storage, #	0	-	0	-	-	0
Grade, %	0	-	0	-	-	0
Peak Hour Factor	83	83	83	83	83	83
Heavy Vehicles, %	2	2	3	3	1	1
Mvmt Flow	60	12	223	12	6	608

Major/Minor	Minor1		Major1		Major2	
Conflicting Flow All	843	223	0	0	223	0
Stage 1	223	-	-	-	-	-
Stage 2	620	-	-	-	-	-
Critical Hdwy	6.42	6.22	-	-	4.11	-
Critical Hdwy Stg 1	5.42	-	-	-	-	-
Critical Hdwy Stg 2	5.42	-	-	-	-	-
Follow-up Hdwy	3.518	3.318	-	-	2.209	-
Pot Cap-1 Maneuver	334	817	-	-	1352	-
Stage 1	814	-	-	-	-	-
Stage 2	536	-	-	-	-	-
Platoon blocked, %			-	-		-
Mov Cap-1 Maneuver	333	817	-	-	1352	-
Mov Cap-2 Maneuver	433	-	-	-	-	-
Stage 1	814	-	-	-	-	-
Stage 2	534	-	-	-	-	-

Approach	WB	NB	SB
HCM Control Delay, s	14	0	0.1
HCM LOS	B		

Minor Lane/Major Mvmt	NBT	NBR	WBLn1	SBL	SBT
Capacity (veh/h)	-	-	470	1352	-
HCM Lane V/C Ratio	-	-	0.154	0.004	-
HCM Control Delay (s)	-	-	14	7.7	-
HCM Lane LOS	-	-	B	A	-
HCM 95th %tile Q(veh)	-	-	0.5	0	-

Lane Group	WBL	WBR	NBT	NBR	SBL	SBT
Lane Configurations						
Volume (vph)	25	5	215	5	1	520
Ideal Flow (vphpl)	1900	1900	1900	1900	1900	1900
Lane Width (ft)	12	12	12	12	12	12
Grade (%)	0%		0%			0%
Storage Length (ft)	0	0		75	75	
Storage Lanes	1	0		1	1	
Taper Length (ft)	100				100	
Link Speed (mph)	25		25			25
Link Distance (ft)	1000		180			950
Travel Time (s)	27.3		4.9			25.9
Confl. Peds. (#/hr)						
Confl. Bikes (#/hr)						
Peak Hour Factor	0.80	0.80	0.80	0.80	0.80	0.80
Growth Factor	100%	100%	100%	100%	100%	100%
Heavy Vehicles (%)	0%	0%	4%	4%	1%	1%
Bus Blockages (#/hr)	0	0	0	0	0	0
Parking (#/hr)						
Mid-Block Traffic (%)	0%		0%			0%
Shared Lane Traffic (%)						
Lane Group Flow (vph)	37	0	269	6	1	650
Sign Control	Stop		Free			Free

Intersection Summary	
Area Type:	Other
Control Type: Unsignalized	

Intersection	
Int Delay, s/veh	0.5

Movement	WBL	WBR	NBT	NBR	SBL	SBT
Vol, veh/h	25	5	215	5	1	520
Conflicting Peds, #/hr	0	0	0	0	0	0
Sign Control	Stop	Stop	Free	Free	Free	Free
RT Channelized	-	None	-	None	-	None
Storage Length	0	-	-	75	75	-
Veh in Median Storage, #	0	-	0	-	-	0
Grade, %	0	-	0	-	-	0
Peak Hour Factor	80	80	80	80	80	80
Heavy Vehicles, %	0	0	4	4	1	1
Mvmt Flow	31	6	269	6	1	650

Major/Minor	Minor1		Major1		Major2	
Conflicting Flow All	922	269	0	0	269	0
Stage 1	269	-	-	-	-	-
Stage 2	653	-	-	-	-	-
Critical Hdwy	6.4	6.2	-	-	4.11	-
Critical Hdwy Stg 1	5.4	-	-	-	-	-
Critical Hdwy Stg 2	5.4	-	-	-	-	-
Follow-up Hdwy	3.5	3.3	-	-	2.209	-
Pot Cap-1 Maneuver	302	775	-	-	1300	-
Stage 1	781	-	-	-	-	-
Stage 2	522	-	-	-	-	-
Platoon blocked, %			-	-		-
Mov Cap-1 Maneuver	302	775	-	-	1300	-
Mov Cap-2 Maneuver	413	-	-	-	-	-
Stage 1	781	-	-	-	-	-
Stage 2	522	-	-	-	-	-

Approach	WB	NB	SB
HCM Control Delay, s	13.8	0	0
HCM LOS	B		

Minor Lane/Major Mvmt	NBT	NBR	WBLn1	SBL	SBT
Capacity (veh/h)	-	-	448	1300	-
HCM Lane V/C Ratio	-	-	0.084	0.001	-
HCM Control Delay (s)	-	-	13.8	7.8	-
HCM Lane LOS	-	-	B	A	-
HCM 95th %tile Q(veh)	-	-	0.3	0	-

Lane Group	EBL	EBT	EBR	WBL	WBT	WBR	NBL	NBT	NBR	SBL	SBT	SBR
Lane Configurations												
Volume (vph)	35	45	110	25	95	20	45	165	20	10	455	65
Ideal Flow (vphpl)	1900	1900	1900	1900	1900	1900	1900	1900	1900	1900	1900	1900
Lane Width (ft)	12	12	12	12	12	12	12	12	12	12	12	12
Grade (%)		0%			0%			0%			0%	
Storage Length (ft)	100		0	70		0	70		260	100		0
Storage Lanes	1		0	1		0	1		1	1		0
Taper Length (ft)	100			100			100			100		
Right Turn on Red			No			No			No			No
Link Speed (mph)		25			25			25			25	
Link Distance (ft)		1000			1000			570			320	
Travel Time (s)		27.3			27.3			15.5			8.7	
Confl. Peds. (#/hr)												
Confl. Bikes (#/hr)												
Peak Hour Factor	0.85	0.85	0.85	0.85	0.85	0.85	0.85	0.85	0.85	0.85	0.85	0.85
Growth Factor	100%	100%	100%	100%	100%	100%	100%	100%	100%	100%	100%	100%
Heavy Vehicles (%)	7%	7%	7%	2%	2%	2%	8%	8%	8%	1%	1%	1%
Bus Blockages (#/hr)	0	0	0	0	0	0	0	0	0	0	0	0
Parking (#/hr)												
Mid-Block Traffic (%)		0%			0%			0%			0%	
Shared Lane Traffic (%)												
Lane Group Flow (vph)	41	182	0	29	136	0	53	194	24	12	611	0
Turn Type	Perm	NA		Perm	NA		Perm	NA	Perm	Perm	NA	
Protected Phases		4			8			6			2	
Permitted Phases	4			8			6		6	2		
Detector Phase	4	4		8	8		6	6	6	2	2	
Switch Phase												
Minimum Initial (s)	8.0	8.0		8.0	8.0		32.0	32.0	32.0	32.0	32.0	
Minimum Split (s)	27.0	27.0		27.0	27.0		36.0	36.0	36.0	36.0	36.0	
Total Split (s)	29.0	29.0		29.0	29.0		36.0	36.0	36.0	36.0	36.0	
Total Split (%)	44.6%	44.6%		44.6%	44.6%		55.4%	55.4%	55.4%	55.4%	55.4%	
Maximum Green (s)	25.0	25.0		25.0	25.0		32.0	32.0	32.0	32.0	32.0	
Yellow Time (s)	3.0	3.0		3.0	3.0		3.0	3.0	3.0	3.0	3.0	
All-Red Time (s)	1.0	1.0		1.0	1.0		1.0	1.0	1.0	1.0	1.0	
Lost Time Adjust (s)	0.0	0.0		0.0	0.0		0.0	0.0	0.0	0.0	0.0	
Total Lost Time (s)	4.0	4.0		4.0	4.0		4.0	4.0	4.0	4.0	4.0	
Lead/Lag												
Lead-Lag Optimize?												
Vehicle Extension (s)	2.0	2.0		2.0	2.0		3.0	3.0	3.0	3.0	3.0	
Minimum Gap (s)	2.0	2.0		2.0	2.0		3.0	3.0	3.0	3.0	3.0	
Time Before Reduce (s)	0.0	0.0		0.0	0.0		0.0	0.0	0.0	0.0	0.0	
Time To Reduce (s)	0.0	0.0		0.0	0.0		0.0	0.0	0.0	0.0	0.0	
Recall Mode	None	None		None	None		Min	Min	Min	Min	Min	
Walk Time (s)	7.0	7.0		7.0	7.0		7.0	7.0	7.0	7.0	7.0	
Flash Dont Walk (s)	16.0	16.0		16.0	16.0		14.0	14.0	14.0	14.0	14.0	
Pedestrian Calls (#/hr)	0	0		0	0		0	0	0	0	0	
v/c Ratio	0.16	0.53		0.12	0.34		0.10	0.16	0.02	0.01	0.25	
Control Delay	17.6	23.7		17.0	19.5		5.1	4.7	4.4	4.4	4.5	
Queue Delay	0.0	0.0		0.0	0.0		0.0	0.0	0.0	0.0	0.0	

Lane Group	EBL	EBT	EBR	WBL	WBT	WBR	NBL	NBT	NBR	SBL	SBT	SBR
Total Delay	17.6	23.7		17.0	19.5		5.1	4.7	4.4	4.4	4.5	
Queue Length 50th (ft)	10	49		7	35		5	18	2	1	32	
Queue Length 95th (ft)	28	90		22	68		18	46	9	6	63	
Internal Link Dist (ft)		920			920			490			240	
Turn Bay Length (ft)	100			70			70		260	100		
Base Capacity (vph)	631	841		590	962		519	1233	1048	838	2458	
Starvation Cap Reductn	0	0		0	0		0	0	0	0	0	
Spillback Cap Reductn	0	0		0	0		0	0	0	0	0	
Storage Cap Reductn	0	0		0	0		0	0	0	0	0	
Reduced v/c Ratio	0.06	0.22		0.05	0.14		0.10	0.16	0.02	0.01	0.25	

Intersection Summary

Area Type: Other
Cycle Length: 65
Actuated Cycle Length: 48.2
Natural Cycle: 65
Control Type: Actuated-Uncoordinated

Splits and Phases: 300: Main St & Freistadt Rd

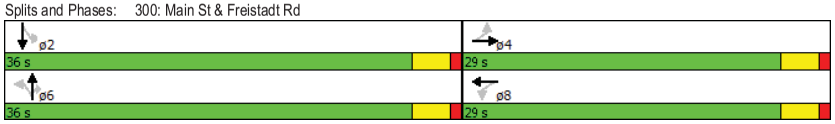

Movement	EBL	EBT	EBR	WBL	WBT	WBR	NBL	NBT	NBR	SBL	SBT	SBR
Lane Configurations												
Volume (veh/h)	35	45	110	25	95	20	45	165	20	10	455	65
Number	7	4	14	3	8	18	1	6	16	5	2	12
Initial Q (Qb), veh	0	0	0	0	0	0	0	0	0	0	0	0
Ped-Bike Adj(A_pbT)	1.00		1.00	1.00		1.00	1.00		1.00	1.00		1.00
Parking Bus, Adj	1.00	1.00	1.00	1.00	1.00	1.00	1.00	1.00	1.00	1.00	1.00	1.00
Adj Sat Flow, veh/h/ln	177.6	177.6	190.0	186.3	186.3	190.0	175.9	175.9	175.9	188.1	188.1	190.0
Adj Flow Rate, veh/h	41	53	129	29	112	24	53	194	24	12	535	76
Adj No. of Lanes	1	1	0	1	1	0	1	1	1	1	2	0
Peak Hour Factor	0.85	0.85	0.85	0.85	0.85	0.85	0.85	0.85	0.85	0.85	0.85	0.85
Percent Heavy Veh, %	7	7	7	2	2	2	8	8	8	1	1	1
Cap, veh/h	298	89	217	252	289	62	581	1134	964	848	2027	287
Arrive On Green	0.19	0.19	0.19	0.19	0.19	0.19	0.64	0.64	0.64	0.64	0.64	0.64
Sat Flow, veh/h	1190	460	1119	1197	1488	319	762	1759	1495	1170	3145	445
Grp Volume(v), veh/h	41	0	182	29	0	136	53	194	24	12	303	308
Grp Sat Flow(s),veh/h/ln	1190	0	1578	1197	0	1806	762	1759	1495	1170	1787	1803
Q Serve(g_s), s	1.5	0.0	5.2	1.1	0.0	3.3	1.6	2.2	0.3	0.2	3.6	3.6
Cycle Q Clear(g_c), s	4.8	0.0	5.2	6.3	0.0	3.3	5.2	2.2	0.3	2.4	3.6	3.6
Prop In Lane	1.00		0.71	1.00		0.18	1.00		1.00	1.00		0.25
Lane Grp Cap(c), veh/h	298	0	307	252	0	351	581	1134	964	848	1152	1162
V/C Ratio(X)	0.14	0.00	0.59	0.12	0.00	0.39	0.09	0.17	0.02	0.01	0.26	0.26
Avail Cap(c_a), veh/h	666	0	795	622	0	910	581	1134	964	848	1152	1162
HCM Platoon Ratio	1.00	1.00	1.00	1.00	1.00	1.00	1.00	1.00	1.00	1.00	1.00	1.00
Upstream Filter(I)	1.00	0.00	1.00	1.00	0.00	1.00	1.00	1.00	1.00	1.00	1.00	1.00
Uniform Delay (d), s/veh	19.5	0.0	18.2	21.1	0.0	17.4	4.9	3.5	3.2	4.0	3.8	3.8
Incr Delay (d2), s/veh	0.1	0.0	0.7	0.1	0.0	0.3	0.1	0.1	0.0	0.0	0.1	0.1
Initial Q Delay(d3),s/veh	0.0	0.0	0.0	0.0	0.0	0.0	0.0	0.0	0.0	0.0	0.0	0.0
%ile BackOfQ(50%),veh/ln	0.5	0.0	2.3	0.4	0.0	1.6	0.3	1.0	0.1	0.1	1.8	1.8
LnGrp Delay(d),s/veh	19.6	0.0	18.9	21.2	0.0	17.7	5.0	3.6	3.2	4.0	3.9	3.9
LnGrp LOS	B		B	C		B	A	A	A	A	A	A
Approach Vol, veh/h		223			165			271			623	
Approach Delay, s/veh		19.0			18.3			3.8			3.9	
Approach LOS		B			B			A			A	

Timer	1	2	3	4	5	6	7	8
Assigned Phs		2		4		6		8
Phs Duration (G+Y+Rc), s		36.0		13.6		36.0		13.6
Change Period (Y+Rc), s		4.0		4.0		4.0		4.0
Max Green Setting (Gmax), s		32.0		25.0		32.0		25.0
Max Q Clear Time (g_c+I1), s		5.6		7.2		7.2		8.3
Green Ext Time (p_c), s		6.3		1.4		6.2		1.4

Intersection Summary	
HCM 2010 Ctrl Delay	8.4
HCM 2010 LOS	A

Lane Group	WBL	WBR	NBT	NBR	SBL	SBT
Lane Configurations						
Volume (vph)	25	1	230	5	10	595
Ideal Flow (vphpl)	1900	1900	1900	1900	1900	1900
Lane Width (ft)	12	12	12	12	12	12
Grade (%)	0%		0%			0%
Storage Length (ft)	0	0		85	115	
Storage Lanes	1	0		1	1	
Taper Length (ft)	100				100	
Link Speed (mph)	25		25			25
Link Distance (ft)	1000		1100			430
Travel Time (s)	27.3		30.0			11.7
Confl. Peds. (#/hr)						
Confl. Bikes (#/hr)						
Peak Hour Factor	0.80	0.80	0.80	0.80	0.80	0.80
Growth Factor	100%	100%	100%	100%	100%	100%
Heavy Vehicles (%)	0%	0%	8%	8%	2%	2%
Bus Blockages (#/hr)	0	0	0	0	0	0
Parking (#/hr)						
Mid-Block Traffic (%)	0%		0%			0%
Shared Lane Traffic (%)						
Lane Group Flow (vph)	32	0	288	6	12	744
Sign Control	Stop		Free			Free

Intersection Summary	
Area Type:	Other

Control Type: Unsignalized

Intersection	
Int Delay, s/veh	0.5

Movement	WBL	WBR	NBT	NBR	SBL	SBT
Vol, veh/h	25	1	230	5	10	595
Conflicting Peds, #/hr	0	0	0	0	0	0
Sign Control	Stop	Stop	Free	Free	Free	Free
RT Channelized	-	None	-	None	-	None
Storage Length	0	-	-	85	115	-
Veh in Median Storage, #	0	-	0	-	-	0
Grade, %	0	-	0	-	-	0
Peak Hour Factor	80	80	80	80	80	80
Heavy Vehicles, %	0	0	8	8	2	2
Mvmt Flow	31	1	288	6	12	744

Major/Minor	Minor1		Major1		Major2	
Conflicting Flow All	1057	288	0	0	288	0
Stage 1	288	-	-	-	-	-
Stage 2	769	-	-	-	-	-
Critical Hdwy	6.4	6.2	-	-	4.12	-
Critical Hdwy Stg 1	5.4	-	-	-	-	-
Critical Hdwy Stg 2	5.4	-	-	-	-	-
Follow-up Hdwy	3.5	3.3	-	-	2.218	-
Pot Cap-1 Maneuver	251	756	-	-	1274	-
Stage 1	766	-	-	-	-	-
Stage 2	461	-	-	-	-	-
Platoon blocked, %			-	-		-
Mov Cap-1 Maneuver	248	756	-	-	1274	-
Mov Cap-2 Maneuver	362	-	-	-	-	-
Stage 1	766	-	-	-	-	-
Stage 2	456	-	-	-	-	-

Approach	WB	NB	SB
HCM Control Delay, s	15.7	0	0.1
HCM LOS	C		

Minor Lane/Major Mvmt	NBT	NBR	WBLn1	SBL	SBT
Capacity (veh/h)	-	-	369	1274	-
HCM Lane V/C Ratio	-	-	0.088	0.01	-
HCM Control Delay (s)	-	-	15.7	7.9	-
HCM Lane LOS	-	-	C	A	-
HCM 95th %tile Q(veh)	-	-	0.3	0	-

Lane Group	EBL	EBT	EBR	WBL	WBT	WBR	NBL	NBT	NBR	SBL	SBT	SBR
Lane Configurations												
Volume (vph)	15	35	40	410	85	10	35	250	130	1	600	45
Ideal Flow (vphpl)	1900	1900	1900	1900	1900	1900	1900	1900	1900	1900	1900	1900
Lane Width (ft)	12	12	12	12	12	12	12	12	12	12	12	12
Grade (%)		0%			0%			0%			0%	
Storage Length (ft)	0		0	0		65	100		100	75		0
Storage Lanes	0		0	1		1	1		1	1		0
Taper Length (ft)	100			100			100			100		
Right Turn on Red			No			No			No			No
Link Speed (mph)		25			25			25			25	
Link Distance (ft)		1000			1000			920			1100	
Travel Time (s)		27.3			27.3			25.1			30.0	
Confl. Peds. (#/hr)												
Confl. Bikes (#/hr)												
Peak Hour Factor	0.77	0.77	0.77	0.77	0.77	0.77	0.77	0.77	0.77	0.77	0.77	0.77
Growth Factor	100%	100%	100%	100%	100%	100%	100%	100%	100%	100%	100%	100%
Heavy Vehicles (%)	4%	4%	4%	3%	3%	3%	5%	5%	5%	2%	2%	2%
Bus Blockages (#/hr)	0	0	0	0	0	0	0	0	0	0	0	0
Parking (#/hr)												
Mid-Block Traffic (%)		0%			0%			0%			0%	
Shared Lane Traffic (%)												
Lane Group Flow (vph)	0	116	0	532	123	0	45	325	169	1	837	0
Turn Type	Perm	NA		Perm	NA		Perm	NA	Perm	Perm	NA	
Protected Phases		4			8			6			2	
Permitted Phases	4			8			6		6	2		
Detector Phase	4	4		8	8		6	6	6	2	2	
Switch Phase												
Minimum Initial (s)	8.0	8.0		8.0	8.0		31.0	31.0	31.0	31.0	31.0	
Minimum Split (s)	27.0	27.0		27.0	27.0		35.0	35.0	35.0	35.0	35.0	
Total Split (s)	30.0	30.0		30.0	30.0		35.0	35.0	35.0	35.0	35.0	
Total Split (%)	46.2%	46.2%		46.2%	46.2%		53.8%	53.8%	53.8%	53.8%	53.8%	
Maximum Green (s)	26.0	26.0		26.0	26.0		31.0	31.0	31.0	31.0	31.0	
Yellow Time (s)	3.0	3.0		3.0	3.0		3.0	3.0	3.0	3.0	3.0	
All-Red Time (s)	1.0	1.0		1.0	1.0		1.0	1.0	1.0	1.0	1.0	
Lost Time Adjust (s)		0.0		0.0	0.0		0.0	0.0	0.0	0.0	0.0	
Total Lost Time (s)		4.0		4.0	4.0		4.0	4.0	4.0	4.0	4.0	
Lead/Lag												
Lead-Lag Optimize?												
Vehicle Extension (s)	2.0	2.0		2.0	2.0		3.0	3.0	3.0	3.0	3.0	
Minimum Gap (s)	2.0	2.0		2.0	2.0		3.0	3.0	3.0	3.0	3.0	
Time Before Reduce (s)	0.0	0.0		0.0	0.0		0.0	0.0	0.0	0.0	0.0	
Time To Reduce (s)	0.0	0.0		0.0	0.0		0.0	0.0	0.0	0.0	0.0	
Recall Mode	None	None		None	None		Min	Min	Min	Min	Min	
Walk Time (s)	7.0	7.0		7.0	7.0		7.0	7.0	7.0	7.0	7.0	
Flash Dont Walk (s)	16.0	16.0		16.0	16.0		17.0	17.0	17.0	17.0	17.0	
Pedestrian Calls (#/hr)	0	0		0	0		0	0	0	0	0	
v/c Ratio		0.18		0.99	0.17		0.41	0.38	0.23	0.00	0.95	
Control Delay		13.6		59.3	13.4		24.6	12.5	11.1	9.0	39.8	
Queue Delay		0.0		0.0	0.0		0.0	0.0	0.0	0.0	0.0	

Lane Group	EBL	EBT	EBR	WBL	WBT	WBR	NBL	NBT	NBR	SBL	SBT	SBR
Total Delay		13.6		59.3	13.4		24.6	12.5	11.1	9.0	39.8	
Queue Length 50th (ft)		29		202	30		11	77	37	0	298	
Queue Length 95th (ft)		50		#304	51		33	106	59	2	#405	
Internal Link Dist (ft)		920			920			840			1020	
Turn Bay Length (ft)							100		100	75		
Base Capacity (vph)		656		538	726		111	863	733	444	879	
Starvation Cap Reductn		0		0	0		0	0	0	0	0	
Spillback Cap Reductn		0		0	0		0	0	0	0	0	
Storage Cap Reductn		0		0	0		0	0	0	0	0	
Reduced v/c Ratio		0.18		0.99	0.17		0.41	0.38	0.23	0.00	0.95	

Intersection Summary

Area Type: Other
Cycle Length: 65
Actuated Cycle Length: 65
Natural Cycle: 70
Control Type: Actuated-Uncoordinated
95th percentile volume exceeds capacity, queue may be longer.
Queue shown is maximum after two cycles.

Splits and Phases: 500: Main St & Buntrock Ave/Green Bay Rd

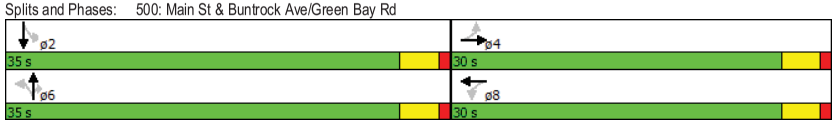

Movement	EBL	EBT	EBR	WBL	WBT	WBR	NBL	NBT	NBR	SBL	SBT	SBR
Lane Configurations												
Volume (veh/h)	15	35	40	410	85	10	35	250	130	1	600	45
Number	7	4	14	3	8	18	1	6	16	5	2	12
Initial Q (Qb), veh	0	0	0	0	0	0	0	0	0	0	0	0
Ped-Bike Adj(A_pbT)	1.00		1.00	1.00		1.00	1.00		1.00	1.00		1.00
Parking Bus, Adj	1.00	1.00	1.00	1.00	1.00	1.00	1.00	1.00	1.00	1.00	1.00	1.00
Adj Sat Flow, veh/h/ln	190.0	182.7	190.0	184.5	184.5	190.0	181.0	181.0	181.0	186.3	186.3	190.0
Adj Flow Rate, veh/h	19	45	52	532	110	13	45	325	169	1	779	58
Adj No. of Lanes	0	1	0	1	1	0	1	1	1	1	1	0
Peak Hour Factor	0.77	0.77	0.77	0.77	0.77	0.77	0.77	0.77	0.77	0.77	0.77	0.77
Percent Heavy Veh, %	4	4	4	3	3	3	5	5	5	2	2	2
Cap, veh/h	131	291	290	566	648	77	137	863	734	437	817	61
Arrive On Green	0.40	0.40	0.40	0.40	0.40	0.40	0.48	0.48	0.48	0.48	0.48	0.48
Sat Flow, veh/h	167	727	726	1281	1619	191	635	1810	1538	899	1713	128
Grp Volume(v), veh/h	116	0	0	532	0	123	45	325	169	1	0	837
Grp Sat Flow(s),veh/h/ln	1620	0	0	1281	0	1811	635	1810	1538	899	0	1840
Q Serve(g_s), s	0.0	0.0	0.0	23.1	0.0	2.8	2.6	7.4	4.2	0.0	0.0	28.4
Cycle Q Clear(g_c), s	2.9	0.0	0.0	26.0	0.0	2.8	31.0	7.4	4.2	7.5	0.0	28.4
Prop In Lane	0.16		0.45	1.00		0.11	1.00		1.00	1.00		0.07
Lane Grp Cap(c), veh/h	712	0	0	566	0	724	137	863	734	437	0	878
V/C Ratio(X)	0.16	0.00	0.00	0.94	0.00	0.17	0.33	0.38	0.23	0.00	0.00	0.95
Avail Cap(c_a), veh/h	712	0	0	566	0	724	137	863	734	437	0	878
HCM Platoon Ratio	1.00	1.00	1.00	1.00	1.00	1.00	1.00	1.00	1.00	1.00	1.00	1.00
Upstream Filter(I)	1.00	0.00	0.00	1.00	0.00	1.00	1.00	1.00	1.00	1.00	0.00	1.00
Uniform Delay (d), s/veh	12.6	0.0	0.0	22.6	0.0	12.6	31.7	10.8	10.0	13.2	0.0	16.3
Incr Delay (d2), s/veh	0.0	0.0	0.0	23.5	0.0	0.0	1.4	0.3	0.2	0.0	0.0	20.0
Initial Q Delay(d3),s/veh	0.0	0.0	0.0	0.0	0.0	0.0	0.0	0.0	0.0	0.0	0.0	0.0
%ile BackOfQ(50%),veh/ln	1.3	0.0	0.0	13.1	0.0	1.4	0.9	3.8	1.8	0.0	0.0	19.1
LnGrp Delay(d),s/veh	12.6	0.0	0.0	46.0	0.0	12.6	33.1	11.1	10.1	13.2	0.0	36.3
LnGrp LOS	B			D		B	C	B	B	B		D
Approach Vol, veh/h		116			655			539			838	
Approach Delay, s/veh		12.6			39.8			12.6			36.3	
Approach LOS		B			D			B			D	

Timer	1	2	3	4	5	6	7	8
Assigned Phs		2		4		6		8
Phs Duration (G+Y+Rc), s		35.0		30.0		35.0		30.0
Change Period (Y+Rc), s		4.0		4.0		4.0		4.0
Max Green Setting (Gmax), s		31.0		26.0		31.0		26.0
Max Q Clear Time (g_c+I1), s		30.4		4.9		33.0		28.0
Green Ext Time (p_c), s		0.5		2.0		0.0		0.0

Intersection Summary

HCM 2010 Ctrl Delay 30.1
HCM 2010 LOS C

Lane Group	EBL	EBR	NBL	NBT	SBT	SBR
Lane Configurations						
Volume (vph)	5	70	70	420	975	30
Ideal Flow (vphpl)	1900	1900	1900	1900	1900	1900
Lane Width (ft)	12	12	12	12	12	12
Grade (%)	0%			0%	0%	
Storage Length (ft)	0	0	25			85
Storage Lanes	1	1	1			1
Taper Length (ft)	100		100			
Link Speed (mph)	25			25	25	
Link Distance (ft)	1000			1000	880	
Travel Time (s)	27.3			27.3	24.0	
Confl. Peds. (#/hr)						
Confl. Bikes (#/hr)						
Peak Hour Factor	0.82	0.82	0.82	0.82	0.82	0.82
Growth Factor	100%	100%	100%	100%	100%	100%
Heavy Vehicles (%)	2%	2%	4%	4%	2%	2%
Bus Blockages (#/hr)	0	0	0	0	0	0
Parking (#/hr)						
Mid-Block Traffic (%)	0%			0%	0%	
Shared Lane Traffic (%)						
Lane Group Flow (vph)	6	85	85	512	1189	37
Sign Control	Stop			Free	Free	

Intersection Summary	
Area Type:	Other
Control Type: Unsignalized	

Intersection	
Int Delay, s/veh	2

Movement	EBL	EBR	NBL	NBT	SBT	SBR
Vol, veh/h	5	70	70	420	975	30
Conflicting Peds, #/hr	0	0	0	0	0	0
Sign Control	Stop	Stop	Free	Free	Free	Free
RT Channelized	-	None	-	None	-	None
Storage Length	0	0	25	-	-	85
Veh in Median Storage, #	0	-	-	0	0	-
Grade, %	0	-	-	0	0	-
Peak Hour Factor	82	82	82	82	82	82
Heavy Vehicles, %	2	2	4	4	2	2
Mvmt Flow	6	85	85	512	1189	37

Major/Minor	Minor2		Major1		Major2	
Conflicting Flow All	1872	1189	1189	0	-	0
Stage 1	1189	-	-	-	-	-
Stage 2	683	-	-	-	-	-
Critical Hdwy	6.42	6.22	4.14	-	-	-
Critical Hdwy Stg 1	5.42	-	-	-	-	-
Critical Hdwy Stg 2	5.42	-	-	-	-	-
Follow-up Hdwy	3.518	3.318	2.236	-	-	-
Pot Cap-1 Maneuver	79	229	580	-	-	-
Stage 1	289	-	-	-	-	-
Stage 2	502	-	-	-	-	-
Platoon blocked, %				-	-	-
Mov Cap-1 Maneuver	67	229	580	-	-	-
Mov Cap-2 Maneuver	187	-	-	-	-	-
Stage 1	289	-	-	-	-	-
Stage 2	428	-	-	-	-	-

Approach	EB	NB	SB
HCM Control Delay, s	29.5	1.8	0
HCM LOS	D		

Minor Lane/Major Mvmt	NBL	NBT	EBLn1	EBLn2	SBT	SBR
Capacity (veh/h)	580	-	187	229	-	-
HCM Lane V/C Ratio	0.147	-	0.033	0.373	-	-
HCM Control Delay (s)	12.3	-	24.9	29.8	-	-
HCM Lane LOS	B	-	C	D	-	-
HCM 95th %tile Q(veh)	0.5	-	0.1	1.6	-	-

Lane Group	WBL	WBR	NBT	NBR	SBL	SBT
Lane Configurations						
Volume (vph)	25	5	535	35	15	315
Ideal Flow (vphpl)	1900	1900	1900	1900	1900	1900
Lane Width (ft)	12	12	12	12	12	12
Grade (%)	0%		0%			0%
Storage Length (ft)	0	0		65	125	
Storage Lanes	1	0		1	1	
Taper Length (ft)	100				100	
Link Speed (mph)	25		25			30
Link Distance (ft)	1000		950			1000
Travel Time (s)	27.3		25.9			22.7
Confl. Peds. (#/hr)						
Confl. Bikes (#/hr)						
Peak Hour Factor	0.95	0.95	0.95	0.95	0.95	0.95
Growth Factor	100%	100%	100%	100%	100%	100%
Heavy Vehicles (%)	7%	7%	1%	1%	2%	2%
Bus Blockages (#/hr)	0	0	0	0	0	0
Parking (#/hr)						
Mid-Block Traffic (%)	0%		0%			0%
Shared Lane Traffic (%)						
Lane Group Flow (vph)	31	0	563	37	16	332
Sign Control	Stop		Free			Free

Intersection Summary	
Area Type:	Other
Control Type: Unsignalized	

Intersection	
Int Delay, s/veh	0.6

Movement	WBL	WBR	NBT	NBR	SBL	SBT
Vol, veh/h	25	5	535	35	15	315
Conflicting Peds, #/hr	0	0	0	0	0	0
Sign Control	Stop	Stop	Free	Free	Free	Free
RT Channelized	-	None	-	None	-	None
Storage Length	0	-	-	65	125	-
Veh in Median Storage, #	0	-	0	-	-	0
Grade, %	0	-	0	-	-	0
Peak Hour Factor	95	95	95	95	95	95
Heavy Vehicles, %	7	7	1	1	2	2
Mvmt Flow	26	5	563	37	16	332

Major/Minor	Minor1		Major1		Major2	
Conflicting Flow All	926	563	0	0	563	0
Stage 1	563	-	-	-	-	-
Stage 2	363	-	-	-	-	-
Critical Hdwy	6.47	6.27	-	-	4.12	-
Critical Hdwy Stg 1	5.47	-	-	-	-	-
Critical Hdwy Stg 2	5.47	-	-	-	-	-
Follow-up Hdwy	3.563	3.363	-	-	2.218	-
Pot Cap-1 Maneuver	292	516	-	-	1008	-
Stage 1	560	-	-	-	-	-
Stage 2	693	-	-	-	-	-
Platoon blocked, %			-	-		-
Mov Cap-1 Maneuver	287	516	-	-	1008	-
Mov Cap-2 Maneuver	409	-	-	-	-	-
Stage 1	560	-	-	-	-	-
Stage 2	682	-	-	-	-	-

Approach	WB	NB	SB
HCM Control Delay, s	14.2	0	0.4
HCM LOS	B		

Minor Lane/Major Mvmt	NBT	NBR	WBLn1	SBL	SBT
Capacity (veh/h)	-	-	424	1008	-
HCM Lane V/C Ratio	-	-	0.074	0.016	-
HCM Control Delay (s)	-	-	14.2	8.6	-
HCM Lane LOS	-	-	B	A	-
HCM 95th %tile Q(veh)	-	-	0.2	0	-

Lane Group	WBL	WBR	NBT	NBR	SBL	SBT
Lane Configurations						
Volume (vph)	5	5	615	15	5	320
Ideal Flow (vphpl)	1900	1900	1900	1900	1900	1900
Lane Width (ft)	12	12	12	12	12	12
Grade (%)	0%		0%			0%
Storage Length (ft)	0	0		75	75	
Storage Lanes	1	0		1	1	
Taper Length (ft)	100				100	
Link Speed (mph)	25		25			25
Link Distance (ft)	1000		180			950
Travel Time (s)	27.3		4.9			25.9
Confl. Peds. (#/hr)						
Confl. Bikes (#/hr)						
Peak Hour Factor	0.89	0.89	0.89	0.89	0.89	0.89
Growth Factor	100%	100%	100%	100%	100%	100%
Heavy Vehicles (%)	0%	0%	1%	1%	1%	1%
Bus Blockages (#/hr)	0	0	0	0	0	0
Parking (#/hr)						
Mid-Block Traffic (%)	0%		0%			0%
Shared Lane Traffic (%)						
Lane Group Flow (vph)	12	0	691	17	6	360
Sign Control	Stop		Free			Free

Intersection Summary	
Area Type:	Other
Control Type: Unsignalized	

Intersection	
Int Delay, s/veh	0.2

Movement	WBL	WBR	NBT	NBR	SBL	SBT
Vol, veh/h	5	5	615	15	5	320
Conflicting Peds, #/hr	0	0	0	0	0	0
Sign Control	Stop	Stop	Free	Free	Free	Free
RT Channelized	-	None	-	None	-	None
Storage Length	0	-	-	75	75	-
Veh in Median Storage, #	0	-	0	-	-	0
Grade, %	0	-	0	-	-	0
Peak Hour Factor	89	89	89	89	89	89
Heavy Vehicles, %	0	0	1	1	1	1
Mvmt Flow	6	6	691	17	6	360

Major/Minor	Minor1		Major1		Major2	
Conflicting Flow All	1062	691	0	0	691	0
Stage 1	691	-	-	-	-	-
Stage 2	371	-	-	-	-	-
Critical Hdwy	6.4	6.2	-	-	4.11	-
Critical Hdwy Stg 1	5.4	-	-	-	-	-
Critical Hdwy Stg 2	5.4	-	-	-	-	-
Follow-up Hdwy	3.5	3.3	-	-	2.209	-
Pot Cap-1 Maneuver	250	448	-	-	908	-
Stage 1	501	-	-	-	-	-
Stage 2	702	-	-	-	-	-
Platoon blocked, %			-	-		-
Mov Cap-1 Maneuver	248	448	-	-	908	-
Mov Cap-2 Maneuver	374	-	-	-	-	-
Stage 1	501	-	-	-	-	-
Stage 2	697	-	-	-	-	-

Approach	WB	NB	SB
HCM Control Delay, s	14.1	0	0.1
HCM LOS	B		

Minor Lane/Major Mvmt	NBT	NBR	WBLn1	SBL	SBT
Capacity (veh/h)	-	-	408	908	-
HCM Lane V/C Ratio	-	-	0.028	0.006	-
HCM Control Delay (s)	-	-	14.1	9	-
HCM Lane LOS	-	-	B	A	-
HCM 95th %tile Q(veh)	-	-	0.1	0	-

Lane Group	EBL	EBT	EBR	WBL	WBT	WBR	NBL	NBT	NBR	SBL	SBT	SBR
Lane Configurations												
Volume (vph)	65	105	100	50	90	25	135	530	50	25	260	50
Ideal Flow (vphpl)	1900	1900	1900	1900	1900	1900	1900	1900	1900	1900	1900	1900
Lane Width (ft)	12	12	12	12	12	12	12	12	12	12	12	12
Grade (%)		0%			0%			0%			0%	
Storage Length (ft)	100		0	70		0	70		260	100		0
Storage Lanes	1		0	1		0	1		1	1		0
Taper Length (ft)	100			100			100			100		
Right Turn on Red			No			No			No			No
Link Speed (mph)		25			25			25			25	
Link Distance (ft)		1000			1000			570			320	
Travel Time (s)		27.3			27.3			15.5			8.7	
Confl. Peds. (#/hr)												
Confl. Bikes (#/hr)												
Peak Hour Factor	0.86	0.86	0.86	0.86	0.86	0.86	0.86	0.86	0.86	0.86	0.86	0.86
Growth Factor	100%	100%	100%	100%	100%	100%	100%	100%	100%	100%	100%	100%
Heavy Vehicles (%)	0%	0%	0%	2%	2%	2%	1%	1%	1%	1%	1%	1%
Bus Blockages (#/hr)	0	0	0	0	0	0	0	0	0	0	0	0
Parking (#/hr)												
Mid-Block Traffic (%)		0%			0%			0%			0%	
Shared Lane Traffic (%)												
Lane Group Flow (vph)	76	238	0	58	134	0	157	616	58	29	360	0
Turn Type	Perm	NA		Perm	NA		Perm	NA	Perm	Perm	NA	
Protected Phases		4			8			6			2	
Permitted Phases	4			8			6		6	2		
Detector Phase	4	4		8	8		6	6	6	2	2	
Switch Phase												
Minimum Initial (s)	8.0	8.0		8.0	8.0		32.0	32.0	32.0	32.0	32.0	
Minimum Split (s)	27.0	27.0		27.0	27.0		36.0	36.0	36.0	36.0	36.0	
Total Split (s)	29.0	29.0		29.0	29.0		36.0	36.0	36.0	36.0	36.0	
Total Split (%)	44.6%	44.6%		44.6%	44.6%		55.4%	55.4%	55.4%	55.4%	55.4%	
Maximum Green (s)	25.0	25.0		25.0	25.0		32.0	32.0	32.0	32.0	32.0	
Yellow Time (s)	3.0	3.0		3.0	3.0		3.0	3.0	3.0	3.0	3.0	
All-Red Time (s)	1.0	1.0		1.0	1.0		1.0	1.0	1.0	1.0	1.0	
Lost Time Adjust (s)	0.0	0.0		0.0	0.0		0.0	0.0	0.0	0.0	0.0	
Total Lost Time (s)	4.0	4.0		4.0	4.0		4.0	4.0	4.0	4.0	4.0	
Lead/Lag												
Lead-Lag Optimize?												
Vehicle Extension (s)	2.0	2.0		2.0	2.0		3.0	3.0	3.0	3.0	3.0	
Minimum Gap (s)	2.0	2.0		2.0	2.0		3.0	3.0	3.0	3.0	3.0	
Time Before Reduce (s)	0.0	0.0		0.0	0.0		0.0	0.0	0.0	0.0	0.0	
Time To Reduce (s)	0.0	0.0		0.0	0.0		0.0	0.0	0.0	0.0	0.0	
Recall Mode	None	None		None	None		Min	Min	Min	Min	Min	
Walk Time (s)	7.0	7.0		7.0	7.0		7.0	7.0	7.0	7.0	7.0	
Flash Dont Walk (s)	16.0	16.0		16.0	16.0		14.0	14.0	14.0	14.0	14.0	
Pedestrian Calls (#/hr)	0	0		0	0		0	0	0	0	0	
v/c Ratio	0.27	0.60		0.28	0.33		0.25	0.53	0.06	0.07	0.17	
Control Delay	18.6	24.7		19.8	18.8		6.6	8.4	5.0	5.6	5.0	
Queue Delay	0.0	0.0		0.0	0.0		0.0	0.0	0.0	0.0	0.0	

Lane Group	EBL	EBT	EBR	WBL	WBT	WBR	NBL	NBT	NBR	SBL	SBT	SBR
Total Delay	18.6	24.7		19.8	18.8		6.6	8.4	5.0	5.6	5.0	
Queue Length 50th (ft)	19	65		15	34		17	84	6	3	19	
Queue Length 95th (ft)	44	114		37	67		51	190	20	13	43	
Internal Link Dist (ft)		920			920			490			240	
Turn Bay Length (ft)	100			70			70		260	100		
Base Capacity (vph)	618	854		451	874		627	1167	992	406	2165	
Starvation Cap Reductn	0	0		0	0		0	0	0	0	0	
Spillback Cap Reductn	0	0		0	0		0	0	0	0	0	
Storage Cap Reductn	0	0		0	0		0	0	0	0	0	
Reduced v/c Ratio	0.12	0.28		0.13	0.15		0.25	0.53	0.06	0.07	0.17	

Intersection Summary

Area Type: Other
Cycle Length: 65
Actuated Cycle Length: 51.7
Natural Cycle: 65
Control Type: Actuated-Uncoordinated

Splits and Phases: 300: Main St & Freistadt Rd

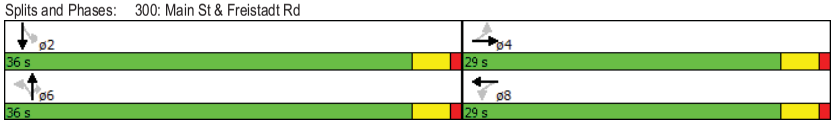

Movement	EBL	EBT	EBR	WBL	WBT	WBR	NBL	NBT	NBR	SBL	SBT	SBR
Lane Configurations												
Volume (veh/h)	65	105	100	50	90	25	135	530	50	25	260	50
Number	7	4	14	3	8	18	1	6	16	5	2	12
Initial Q (Qb), veh	0	0	0	0	0	0	0	0	0	0	0	0
Ped-Bike Adj(A_pbT)	1.00		1.00	1.00		1.00	1.00		1.00	1.00		1.00
Parking Bus, Adj	1.00	1.00	1.00	1.00	1.00	1.00	1.00	1.00	1.00	1.00	1.00	1.00
Adj Sat Flow, veh/h/ln	190.0	190.0	190.0	186.3	186.3	190.0	188.1	188.1	188.1	188.1	188.1	190.0
Adj Flow Rate, veh/h	76	122	116	58	105	29	157	616	58	29	302	58
Adj No. of Lanes	1	1	0	1	1	0	1	1	1	1	2	0
Peak Hour Factor	0.86	0.86	0.86	0.86	0.86	0.86	0.86	0.86	0.86	0.86	0.86	0.86
Percent Heavy Veh, %	0	0	0	2	2	2	1	1	1	1	1	1
Cap, veh/h	360	212	202	270	332	92	720	1149	977	461	1832	347
Arrive On Green	0.24	0.24	0.24	0.24	0.24	0.24	0.61	0.61	0.61	0.61	0.61	0.61
Sat Flow, veh/h	1275	897	853	1138	1406	388	1027	1881	1599	769	2999	569
Grp Volume(v), veh/h	76	0	238	58	0	134	157	616	58	29	178	182
Grp Sat Flow(s),veh/h/ln	1275	0	1750	1138	0	1794	1027	1881	1599	769	1787	1781
Q Serve(g_s), s	2.7	0.0	6.3	2.5	0.0	3.2	4.1	9.9	0.8	1.2	2.3	2.3
Cycle Q Clear(g_c), s	6.0	0.0	6.3	8.8	0.0	3.2	6.4	9.9	0.8	11.1	2.3	2.3
Prop In Lane	1.00		0.49	1.00		0.22	1.00		1.00	1.00		0.32
Lane Grp Cap(c), veh/h	360	0	414	270	0	424	720	1149	977	461	1092	1088
V/C Ratio(X)	0.21	0.00	0.58	0.22	0.00	0.32	0.22	0.54	0.06	0.06	0.16	0.17
Avail Cap(c_a), veh/h	667	0	835	544	0	856	720	1149	977	461	1092	1088
HCM Platoon Ratio	1.00	1.00	1.00	1.00	1.00	1.00	1.00	1.00	1.00	1.00	1.00	1.00
Upstream Filter(I)	1.00	0.00	1.00	1.00	0.00	1.00	1.00	1.00	1.00	1.00	1.00	1.00
Uniform Delay (d), s/veh	19.0	0.0	17.7	21.6	0.0	16.5	5.8	5.9	4.1	9.1	4.4	4.4
Incr Delay (d2), s/veh	0.1	0.0	0.5	0.1	0.0	0.2	0.2	0.5	0.0	0.1	0.1	0.1
Initial Q Delay(d3),s/veh	0.0	0.0	0.0	0.0	0.0	0.0	0.0	0.0	0.0	0.0	0.0	0.0
%ile BackOfQ(50%),veh/ln	1.0	0.0	3.1	0.8	0.0	1.6	1.2	5.1	0.3	0.3	1.1	1.1
LnGrp Delay(d),s/veh	19.1	0.0	18.1	21.7	0.0	16.7	6.0	6.4	4.1	9.2	4.5	4.5
LnGrp LOS	B		B	C		B	A	A	A	A	A	A
Approach Vol, veh/h		314			192			831			389	
Approach Delay, s/veh		18.4			18.2			6.2			4.8	
Approach LOS		B			B			A			A	

Timer	1	2	3	4	5	6	7	8
Assigned Phs		2		4		6		8
Phs Duration (G+Y+Rc), s		36.0		16.4		36.0		16.4
Change Period (Y+Rc), s		4.0		4.0		4.0		4.0
Max Green Setting (Gmax), s		32.0		25.0		32.0		25.0
Max Q Clear Time (g_c+I1), s		13.1		8.3		11.9		10.8
Green Ext Time (p_c), s		7.8		1.7		8.1		1.6

Intersection Summary	
HCM 2010 Ctrl Delay	9.4
HCM 2010 LOS	A

Lane Group	WBL	WBR	NBT	NBR	SBL	SBT
Lane Configurations						
Volume (vph)	10	10	775	5	15	455
Ideal Flow (vphpl)	1900	1900	1900	1900	1900	1900
Lane Width (ft)	12	12	12	12	12	12
Grade (%)	0%		0%			0%
Storage Length (ft)	0	0		85	115	
Storage Lanes	1	0		1	1	
Taper Length (ft)	100				100	
Link Speed (mph)	25		25			25
Link Distance (ft)	1000		1100			430
Travel Time (s)	27.3		30.0			11.7
Confl. Peds. (#/hr)						
Confl. Bikes (#/hr)						
Peak Hour Factor	0.92	0.92	0.92	0.92	0.92	0.92
Growth Factor	100%	100%	100%	100%	100%	100%
Heavy Vehicles (%)	6%	6%	1%	1%	3%	3%
Bus Blockages (#/hr)	0	0	0	0	0	0
Parking (#/hr)						
Mid-Block Traffic (%)	0%		0%			0%
Shared Lane Traffic (%)						
Lane Group Flow (vph)	22	0	842	5	16	495
Sign Control	Stop		Free			Free

Intersection Summary	
Area Type:	Other

Control Type: Unsignalized

Intersection	
Int Delay, s/veh	0.4

Movement	WBL	WBR	NBT	NBR	SBL	SBT
Vol, veh/h	10	10	775	5	15	455
Conflicting Peds, #/hr	0	0	0	0	0	0
Sign Control	Stop	Stop	Free	Free	Free	Free
RT Channelized	-	None	-	None	-	None
Storage Length	0	-	-	85	115	-
Veh in Median Storage, #	0	-	0	-	-	0
Grade, %	0	-	0	-	-	0
Peak Hour Factor	92	92	92	92	92	92
Heavy Vehicles, %	6	6	1	1	3	3
Mvmt Flow	11	11	842	5	16	495

Major/Minor	Minor1		Major1		Major2	
Conflicting Flow All	1369	842	0	0	842	0
Stage 1	842	-	-	-	-	-
Stage 2	527	-	-	-	-	-
Critical Hdwy	6.46	6.26	-	-	4.13	-
Critical Hdwy Stg 1	5.46	-	-	-	-	-
Critical Hdwy Stg 2	5.46	-	-	-	-	-
Follow-up Hdwy	3.554	3.354	-	-	2.227	-
Pot Cap-1 Maneuver	158	358	-	-	789	-
Stage 1	416	-	-	-	-	-
Stage 2	584	-	-	-	-	-
Platoon blocked, %			-	-		-
Mov Cap-1 Maneuver	155	358	-	-	789	-
Mov Cap-2 Maneuver	288	-	-	-	-	-
Stage 1	416	-	-	-	-	-
Stage 2	572	-	-	-	-	-

Approach	WB	NB	SB
HCM Control Delay, s	17.1	0	0.3
HCM LOS	C		

Minor Lane/Major Mvmt	NBT	NBR	WBLn1	SBL	SBT
Capacity (veh/h)	-	-	319	789	-
HCM Lane V/C Ratio	-	-	0.068	0.021	-
HCM Control Delay (s)	-	-	17.1	9.7	-
HCM Lane LOS	-	-	C	A	-
HCM 95th %tile Q(veh)	-	-	0.2	0.1	-

Lane Group	EBL	EBT	EBR	WBL	WBT	WBR	NBL	NBT	NBR	SBL	SBT	SBR
Lane Configurations												
Volume (vph)	40	50	25	240	30	5	25	830	390	10	450	25
Ideal Flow (vphpl)	1900	1900	1900	1900	1900	1900	1900	1900	1900	1900	1900	1900
Lane Width (ft)	12	12	12	12	12	12	12	12	12	12	12	12
Grade (%)		0%			0%			0%			0%	
Storage Length (ft)	0		0	0		65	100		100	75		0
Storage Lanes	0		0	1		1	1		1	1		0
Taper Length (ft)	100			100			100			100		
Right Turn on Red			No			No			No			No
Link Speed (mph)		25			25			25			25	
Link Distance (ft)		1000			1000			920			1100	
Travel Time (s)		27.3			27.3			25.1			30.0	
Confl. Peds. (#/hr)												
Confl. Bikes (#/hr)												
Peak Hour Factor	0.94	0.94	0.94	0.94	0.94	0.94	0.94	0.94	0.94	0.94	0.94	0.94
Growth Factor	100%	100%	100%	100%	100%	100%	100%	100%	100%	100%	100%	100%
Heavy Vehicles (%)	1%	1%	1%	2%	2%	2%	1%	1%	1%	2%	2%	2%
Bus Blockages (#/hr)	0	0	0	0	0	0	0	0	0	0	0	0
Parking (#/hr)												
Mid-Block Traffic (%)		0%			0%			0%			0%	
Shared Lane Traffic (%)												
Lane Group Flow (vph)	0	123	0	255	37	0	27	883	415	11	506	0
Turn Type	Perm	NA		Perm	NA		Perm	NA	Perm	Perm	NA	
Protected Phases		4			8			6			2	
Permitted Phases	4			8			6		6	2		
Detector Phase	4	4		8	8		6	6	6	2	2	
Switch Phase												
Minimum Initial (s)	8.0	8.0		8.0	8.0		32.0	32.0	32.0	32.0	32.0	
Minimum Split (s)	27.0	27.0		27.0	27.0		36.0	36.0	36.0	36.0	36.0	
Total Split (s)	29.0	29.0		29.0	29.0		36.0	36.0	36.0	36.0	36.0	
Total Split (%)	44.6%	44.6%		44.6%	44.6%		55.4%	55.4%	55.4%	55.4%	55.4%	
Maximum Green (s)	25.0	25.0		25.0	25.0		32.0	32.0	32.0	32.0	32.0	
Yellow Time (s)	3.0	3.0		3.0	3.0		3.0	3.0	3.0	3.0	3.0	
All-Red Time (s)	1.0	1.0		1.0	1.0		1.0	1.0	1.0	1.0	1.0	
Lost Time Adjust (s)		0.0		0.0	0.0		0.0	0.0	0.0	0.0	0.0	
Total Lost Time (s)		4.0		4.0	4.0		4.0	4.0	4.0	4.0	4.0	
Lead/Lag												
Lead-Lag Optimize?												
Vehicle Extension (s)	2.0	2.0		2.0	2.0		3.0	3.0	3.0	3.0	3.0	
Minimum Gap (s)	2.0	2.0		2.0	2.0		3.0	3.0	3.0	3.0	3.0	
Time Before Reduce (s)	0.0	0.0		0.0	0.0		0.0	0.0	0.0	0.0	0.0	
Time To Reduce (s)	0.0	0.0		0.0	0.0		0.0	0.0	0.0	0.0	0.0	
Recall Mode	None	None		None	None		Min	Min	Min	Min	Min	
Walk Time (s)	7.0	7.0		7.0	7.0		7.0	7.0	7.0	7.0	7.0	
Flash Dont Walk (s)	16.0	16.0		16.0	16.0		17.0	17.0	17.0	17.0	17.0	
Pedestrian Calls (#/hr)	0	0		0	0		0	0	0	0	0	
v/c Ratio		0.28		0.70	0.08		0.06	0.80	0.44	0.07	0.47	
Control Delay		16.9		29.0	14.4		7.3	18.7	9.6	8.4	9.5	
Queue Delay		0.0		0.0	0.0		0.0	0.0	0.0	0.0	0.0	

Lane Group	EBL	EBT	EBR	WBL	WBT	WBR	NBL	NBT	NBR	SBL	SBT	SBR
Total Delay		16.9		29.0	14.4		7.3	18.7	9.6	8.4	9.5	
Queue Length 50th (ft)		31		74	9		3	192	64	1	80	
Queue Length 95th (ft)		65		138	26		16	#536	168	10	201	
Internal Link Dist (ft)		920			920			840			1020	
Turn Bay Length (ft)							100		100	75		
Base Capacity (vph)		753		623	836		447	1103	938	163	1084	
Starvation Cap Reductn		0		0	0		0	0	0	0	0	
Spillback Cap Reductn		0		0	0		0	0	0	0	0	
Storage Cap Reductn		0		0	0		0	0	0	0	0	
Reduced v/c Ratio		0.16		0.41	0.04		0.06	0.80	0.44	0.07	0.47	

Intersection Summary

Area Type: Other
Cycle Length: 65
Actuated Cycle Length: 55
Natural Cycle: 65
Control Type: Actuated-Uncoordinated
95th percentile volume exceeds capacity, queue may be longer.
Queue shown is maximum after two cycles.

Splits and Phases: 500: Main St & Buntrock Ave/Green Bay Rd

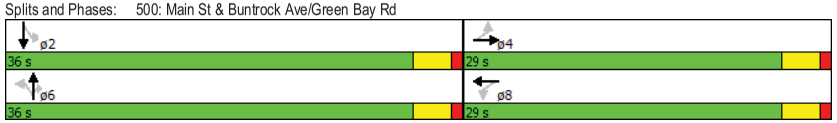

Movement	EBL	EBT	EBR	WBL	WBT	WBR	NBL	NBT	NBR	SBL	SBT	SBR
Lane Configurations												
Volume (veh/h)	40	50	25	240	30	5	25	830	390	10	450	25
Number	7	4	14	3	8	18	1	6	16	5	2	12
Initial Q (Qb), veh	0	0	0	0	0	0	0	0	0	0	0	0
Ped-Bike Adj(A_pbT)	1.00		1.00	1.00		1.00	1.00		1.00	1.00		1.00
Parking Bus, Adj	1.00	1.00	1.00	1.00	1.00	1.00	1.00	1.00	1.00	1.00	1.00	1.00
Adj Sat Flow, veh/h/ln	190.0	188.1	190.0	186.3	186.3	190.0	188.1	188.1	188.1	186.3	186.3	190.0
Adj Flow Rate, veh/h	43	53	27	255	32	5	27	883	415	11	479	27
Adj No. of Lanes	0	1	0	1	1	0	1	1	1	1	1	0
Peak Hour Factor	0.94	0.94	0.94	0.94	0.94	0.94	0.94	0.94	0.94	0.94	0.94	0.94
Percent Heavy Veh, %	1	1	1	2	2	2	1	1	1	2	2	2
Cap, veh/h	212	245	104	436	450	70	496	1074	913	210	998	56
Arrive On Green	0.29	0.29	0.29	0.29	0.29	0.29	0.57	0.57	0.57	0.57	0.57	0.57
Sat Flow, veh/h	437	857	364	1313	1573	246	898	1881	1599	423	1747	98
Grp Volume(v), veh/h	123	0	0	255	0	37	27	883	415	11	0	506
Grp Sat Flow(s),veh/h/ln	1658	0	0	1313	0	1819	898	1881	1599	423	0	1845
Q Serve(g_s), s	0.0	0.0	0.0	10.3	0.0	0.8	1.0	21.3	8.4	1.2	0.0	9.1
Cycle Q Clear(g_c), s	2.9	0.0	0.0	13.3	0.0	0.8	10.1	21.3	8.4	22.5	0.0	9.1
Prop In Lane	0.35		0.22	1.00		0.14	1.00		1.00	1.00		0.05
Lane Grp Cap(c), veh/h	561	0	0	436	0	521	496	1074	913	210	0	1054
V/C Ratio(X)	0.22	0.00	0.00	0.58	0.00	0.07	0.05	0.82	0.45	0.05	0.00	0.48
Avail Cap(c_a), veh/h	819	0	0	646	0	812	496	1074	913	210	0	1054
HCM Platoon Ratio	1.00	1.00	1.00	1.00	1.00	1.00	1.00	1.00	1.00	1.00	1.00	1.00
Upstream Filter(I)	1.00	0.00	0.00	1.00	0.00	1.00	1.00	1.00	1.00	1.00	0.00	1.00
Uniform Delay (d), s/veh	15.3	0.0	0.0	20.4	0.0	14.6	10.1	9.7	7.0	18.8	0.0	7.1
Incr Delay (d2), s/veh	0.1	0.0	0.0	0.5	0.0	0.0	0.0	5.2	0.4	0.1	0.0	0.3
Initial Q Delay(d3),s/veh	0.0	0.0	0.0	0.0	0.0	0.0	0.0	0.0	0.0	0.0	0.0	0.0
%ile BackOfQ(50%),veh/ln	1.4	0.0	0.0	3.8	0.0	0.4	0.3	12.4	3.8	0.1	0.0	4.6
LnGrp Delay(d),s/veh	15.4	0.0	0.0	20.9	0.0	14.6	10.1	14.9	7.3	18.9	0.0	7.4
LnGrp LOS	B			C		B	B	B	A	B		A
Approach Vol, veh/h		123			292			1325			517	
Approach Delay, s/veh		15.4			20.1			12.5			7.7	
Approach LOS		B			C			B			A	

Timer	1	2	3	4	5	6	7	8
Assigned Phs		2		4		6		8
Phs Duration (G+Y+Rc), s		36.0		20.0		36.0		20.0
Change Period (Y+Rc), s		4.0		4.0		4.0		4.0
Max Green Setting (Gmax), s		32.0		25.0		32.0		25.0
Max Q Clear Time (g_c+I1), s		24.5		4.9		23.3		15.3
Green Ext Time (p_c), s		5.9		1.0		6.7		0.8

Intersection Summary

HCM 2010 Ctrl Delay	12.5
HCM 2010 LOS	B

Lane Group	EBL	EBR	NBL	NBT	SBT	SBR
Lane Configurations						
Volume (vph)	5	40	30	1190	680	15
Ideal Flow (vphpl)	1900	1900	1900	1900	1900	1900
Lane Width (ft)	12	12	12	12	12	12
Grade (%)	0%			0%	0%	
Storage Length (ft)	0	0	25			85
Storage Lanes	1	1	1			1
Taper Length (ft)	100		100			
Link Speed (mph)	25			25	25	
Link Distance (ft)	1000			1000	880	
Travel Time (s)	27.3			27.3	24.0	
Confl. Peds. (#/hr)						
Confl. Bikes (#/hr)						
Peak Hour Factor	0.96	0.96	0.96	0.96	0.96	0.96
Growth Factor	100%	100%	100%	100%	100%	100%
Heavy Vehicles (%)	0%	0%	1%	1%	2%	2%
Bus Blockages (#/hr)	0	0	0	0	0	0
Parking (#/hr)						
Mid-Block Traffic (%)	0%			0%	0%	
Shared Lane Traffic (%)						
Lane Group Flow (vph)	5	42	31	1240	708	16
Sign Control	Stop			Free	Free	

Intersection Summary	
Area Type:	Other
Control Type: Unsignalized	

Intersection	
Int Delay, s/veh	0.5

Movement	EBL	EBR	NBL	NBT	SBT	SBR
Vol, veh/h	5	40	30	1190	680	15
Conflicting Peds, #/hr	0	0	0	0	0	0
Sign Control	Stop	Stop	Free	Free	Free	Free
RT Channelized	-	None	-	None	-	None
Storage Length	0	0	25	-	-	85
Veh in Median Storage, #	0	-	-	0	0	-
Grade, %	0	-	-	0	0	-
Peak Hour Factor	96	96	96	96	96	96
Heavy Vehicles, %	0	0	1	1	2	2
Mvmt Flow	5	42	31	1240	708	16

Major/Minor	Minor2		Major1		Major2	
Conflicting Flow All	2010	708	708	0	-	0
Stage 1	708	-	-	-	-	-
Stage 2	1302	-	-	-	-	-
Critical Hdwy	6.4	6.2	4.11	-	-	-
Critical Hdwy Stg 1	5.4	-	-	-	-	-
Critical Hdwy Stg 2	5.4	-	-	-	-	-
Follow-up Hdwy	3.5	3.3	2.209	-	-	-
Pot Cap-1 Maneuver	66	438	895	-	-	-
Stage 1	492	-	-	-	-	-
Stage 2	257	-	-	-	-	-
Platoon blocked, %				-	-	-
Mov Cap-1 Maneuver	64	438	895	-	-	-
Mov Cap-2 Maneuver	176	-	-	-	-	-
Stage 1	492	-	-	-	-	-
Stage 2	248	-	-	-	-	-

Approach	EB	NB	SB
HCM Control Delay, s	15.4	0.2	0
HCM LOS	C		

Minor Lane/Major Mvmt	NBL	NBT	EBLn1	EBLn2	SBT	SBR
Capacity (veh/h)	895	-	176	438	-	-
HCM Lane V/C Ratio	0.035	-	0.03	0.095	-	-
HCM Control Delay (s)	9.2	-	26.1	14.1	-	-
HCM Lane LOS	A	-	D	B	-	-
HCM 95th %tile Q(veh)	0.1	-	0.1	0.3	-	-